Проектирование сетей,
поставка оборудования, оптимизация и
поддержка IT-инфраструктуры

newnets.ru
newnets@newnets.ru
8 800 777 57 00

NS-XFP-W23L60D

10Gbps XFP Bi-Directional Transceiver, 60km Reach

1270nmTX / 1330 nm RX

Особенности

- Поддерживает скорость передачи данных от 9.95Gb/s до 10.3Gb/s
- Возможность "горячей" замены
- Максимальная дальность связи 60km
- 1270/1330nm DFB лазерный передатчик

  1330/1270nm APD Приемник
- XFP MSA с LC коннектором
- +3.3V，+1.8V источники питания
- Рассеиваемая мощность <2W
- Согласован с RoHS
- Рабочие температуры -5°C to 70°C



Применение

- 10GBASE-ER 10G Ethernet at 10.3125Gbps
- 10GBASE-EW 10G Ethernet at 9.953Gbps
- 1200-SM-LL-L 1-0G Fiber Channel at 10.51875Gbps
- 10GBASE-ER 10G Ethernet with FEC

Описание

NS-XFP-W23L60D согласован с IEEE803.3ae 10Gbase-Bx. с дольностью связи до 60km на SMF.Трансивер содержит передатчик с 1270/1330nm DFB лазерным передатчиком и приемник состоит из APD фотодиода интегрированного с TIA,.Приемник и передатчик могут работать в широком температурном диапазоне от 0℃ до +70℃.

Абсолютные максимальные значения

Parameter	Symbol	Min	Max	Unit	Ref.
Storage Ambient Temperature Range		-40	+85	℃	
Powered case Temperature Range		0	+70	℃	
Operating Relative Humidity	RH		85	%	
Supply Voltage Range @3.3V	Vcc3	0	3.6	V	
Supply Voltage Range @ 1.8V		0	1.98	V	

Any stress beyond the maximum ratings can result in permanent damage. The device specifications are guaranteed only under the recommended operating conditions.

Электрические характеристики

Parameter	Symbol	Min	Typ	Max	Unit	Note
Operating Case Temperature Range	*Tc*	0		+70	℃	
Power Supply Voltage @ 3.3V	Vcc3	3.13	3.3	3.47	V	
Power Supply Voltage @ 1.8V		1.62	1.8	1.98		
Module total power	P			2	W	
Transmitter						
Input differential impedance	Rin		100		Ω	1
Differential data input swing	Vin,pp	120		820	mV	
Transmit Disable Voltage	VD	2.0		VCC	V	
Transmit Enable Voltage	VEN	0		0.8	V	
Transmit Disable Assert Time				10	us	
Receiver						
Differential data output swing	Vout,pp	340		850	mV	
Data output rise time	t_r			38	ps	2
Data output fall time	t_f			38	ps	2
LOS Fault	$V_{LOS\ fault}$	Vcc – 0.5		Vcc_{HOST}	V	3
LOS Normal	$V_{LOS\ norm}$	GND		GND+0.5	V	3
Power Supply Rejection	PSR	See Note 3 below				4

Notes:
1. After internal AC coupling.
2. 20 – 80 %
3. Loss Of Signal is open collector to be pulled up with a 4.7k – 10kohm resistor to 3.15 – 3.6V. Logic 0 indicates normal operation; logic 1 indicates no signal detected.
4. Per Section 2.7.1. in the XFP MSA Specification.

Оптические характеристики

Parameter	Symbol	Min	Typ	Max	Unit	Ref.
Transmitter						
Optical output Power	P	2		7	dBm	
Optical Wavelength	λ	1260	1270	1280	nm	
		1320	1330	1340		
Side Mode Suppression Ratio	SMSR	30			dB	
Optical Extinction Ratio	ER	3.5			dB	1
Average Launch power of OFF transmitter	POFF	-30			dBm	
Tx Jitter	Tx_j	Compliant with each standard requirements				
Receiver						
Receiver Sensitivity	RSENS			-20	dBm	2
Receiver Sensitivity in OMA	RSENS			-18	dBm	2
Maximum Input Power	PMAX			-7	dBm	
Optical Center Wavelength	λC	1320		1340	nm	
		1260		1280		
LOS De-Assert	LOS_D			-25	dBm	
LOS Assert	LOS_A	-28			dBm	
LOS Hysteresis		1		5	dB	

Notes:
1, PRBS 2^{31}-1 test pattern @10.3125Gbps.
2, PRBS 2^{31}-1 test pattern @10.3125Gbps, BER≤10^{-12}.

Pin описание

Pin	Logic	Symbol	Name/Description	Ref
1		GND	Module Ground	1
2		VEE5	Optional –5.2 Power Supply – **Not required**	
3	LVTTL-I	Mod-Desel	Module De-select; When held low allows the module to , respond to 2-wire serial interface commands	
4	LVTTL-O	Interrupt	Interrupt (bar); Indicates presence of an important condition which can be read over the serial 2-wire interface	2
5	LVTTL-I	TX_DIS	Transmitter Disable; Transmitter laser source turned off	
6		VCC5	+5 Power Supply– **Not required**	
7		GND	Module Ground	1
8		VCC3	+3.3V Power Supply	
9		VCC3	+3.3V Power Supply	

Проектирование сетей,
поставка оборудования, оптимизация и
поддержка IT-инфраструктуры

newnets.ru
newnets@newnets.ru
8 800 777 57 00

10	LVTTL-I	SCL	Serial 2-wire interface clock	2
11	LVTTL-I/O	SDA	Serial 2-wire interface data line	2
12	LVTTL-O	Mod_Abs	Module Absent; Indicates module is not present. Grounded in the module.	2
13	LVTTL-O	Mod_NR	Module Not Ready;	2
14	LVTTL-O	RX_LOS	Receiver Loss of Signal indicator	2
15		GND	Module Ground	1
16		GND	Module Ground	1
17	CML-O	RD-	Receiver inverted data output	
18	CML-O	RD+	Receiver non-inverted data output	
19		GND	Module Ground	1
20		VCC2	+1.8V Power Supply	
21	LVTTL-I	P_Down/RST	Power Down; When high, places the module in the low power stand-by mode and on the falling edge of P_Down initiates a module reset 2-wire serial interface equivalent to a power cycle Reset; The falling edge initiates a complete reset of the module including the	
22		VCC2	+1.8V Power Supply	
23		GND	Module Ground	1
24	PECL-I	RefCLK+	Reference Clock non-inverted input, AC coupled on the host board – **Not required**	3
25	PECL-I	RefCLK-	Reference Clock inverted input, AC coupled on the host board – **Not required**	3
26		GND	Module Ground	1
27		GND	Module Ground	1
28	CML-I	TD-	Transmitter inverted data input	
29	CML-I	TD+	Transmitter non-inverted data input	
30		GND	Module Ground	1

Notes:
1. Module circuit ground is isolated from module chassis ground within the module.
2. Open collector; should be pulled up with 4.7k – 10k ohms on host board to a voltage between 3.15Vand 3.6V.
3. A Reference Clock input is not required.

Проектирование сетей,
поставка оборудования, оптимизация и
поддержка IT-инфраструктуры

newnets.ru
newnets@newnets.ru
8 800 777 57 00

Распиновка

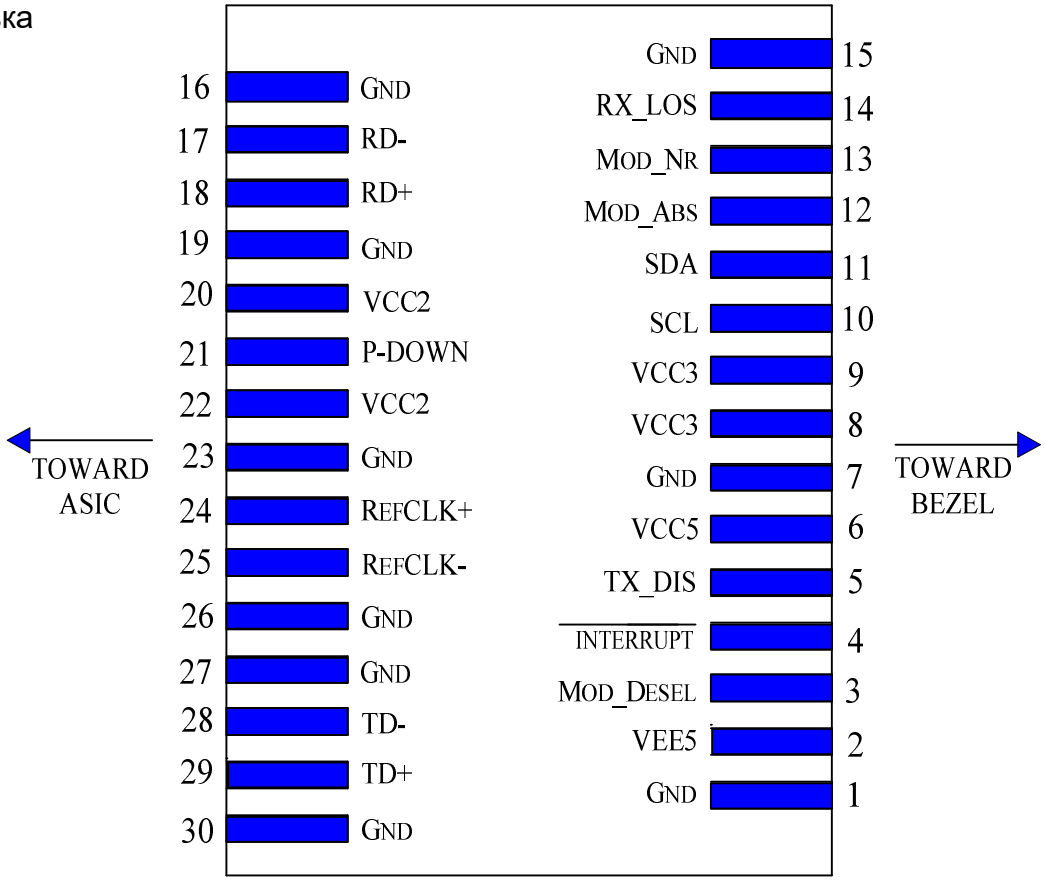

Основные характеристики

Parameter	Symbol	Min	Typ	Max	Units	Ref.
Bit Rate	BR	9.95		10.5	Gb/s	1
Bit Error Ratio	BER			10^{-12}		2
Max. Supported Link Length	L_{MAX}		60		km	1

Notes:
1. Tested with a $2^{31} – 1$ PRBS

Интерфейс управления

The transceivers provide serial ID memory contents and diagnostic information about the present operating conditions by the 2-wire serial interface (SCL, SDA).

The Module provides diagnostic information about the present operating conditions. The transceiver generates this diagnostic data by digitization of internal analog signals. Alarm/warning threshold data is written during device manufacture. Received power monitoring, transmitted power monitoring, bias current monitoring, supply voltage monitoring and temperature monitoring all are implemented.

The digital diagnostic memory map specific data field defines as following.

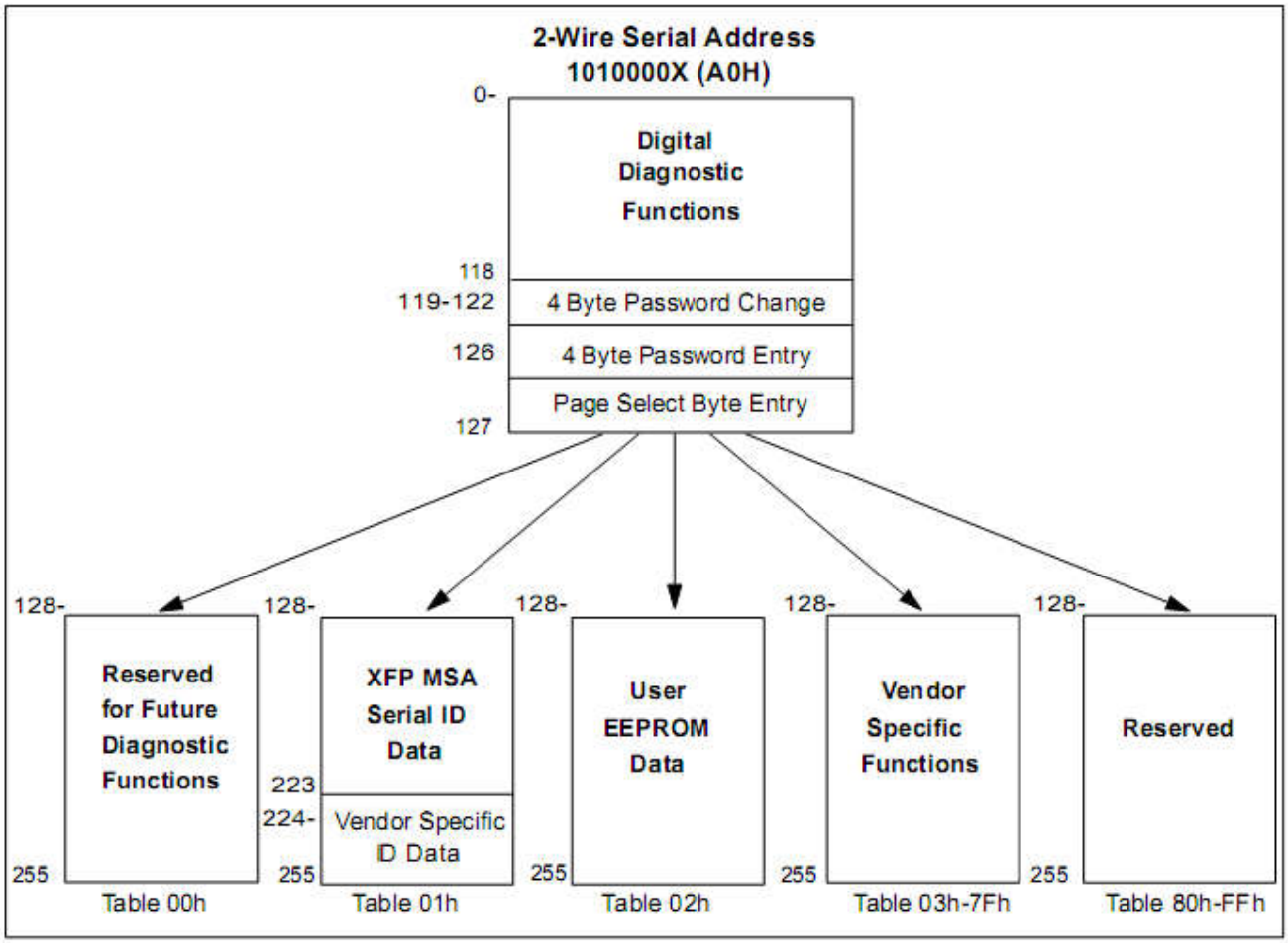

Рекомендуемая схема питания

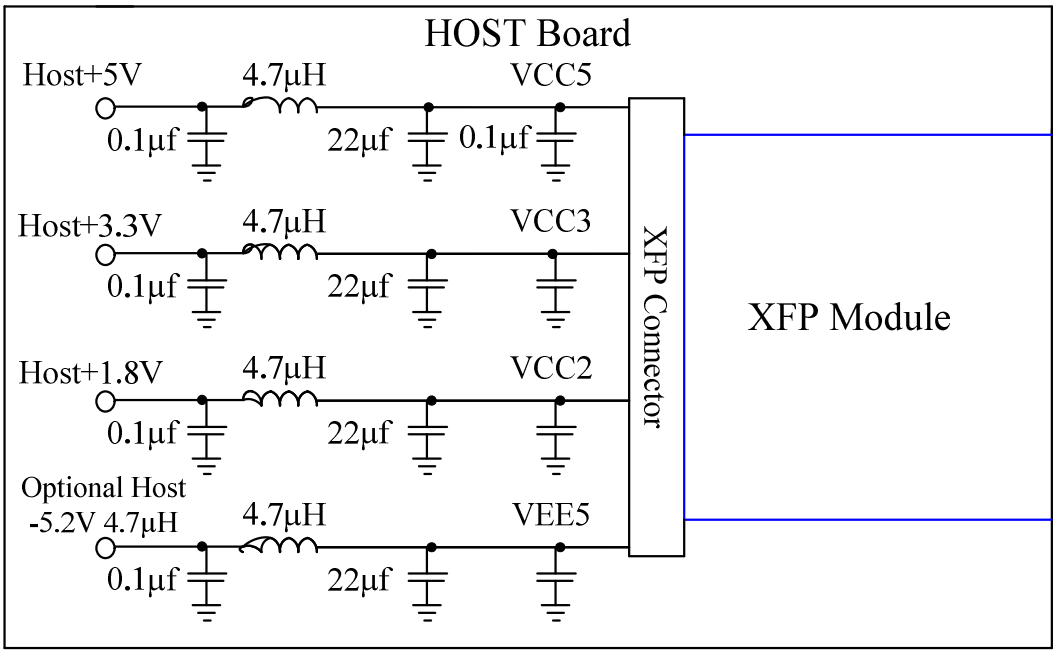

Рекомендуемая схема высокоскоростного интерфейса

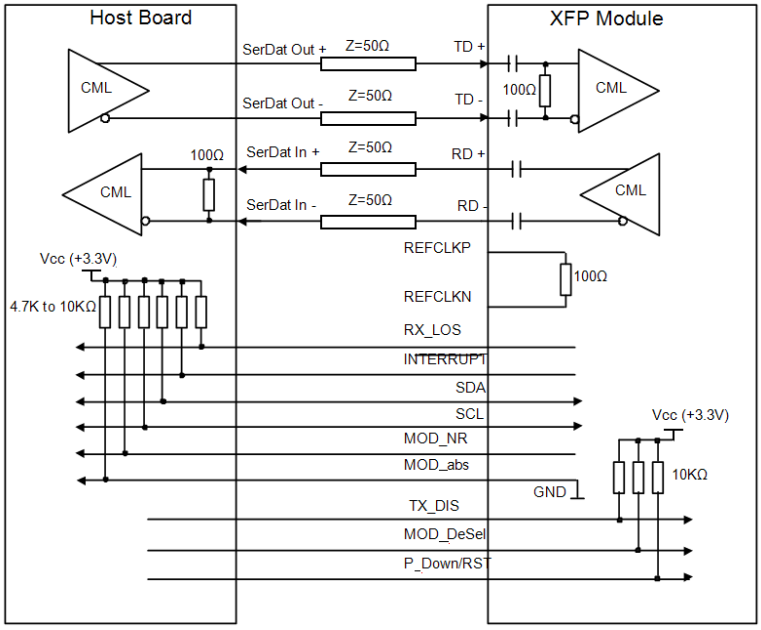

Механические характеристики

XFP transceivers are compliant with the dimensions defined by the XFP Multi-Sourcing Agreement (MSA).

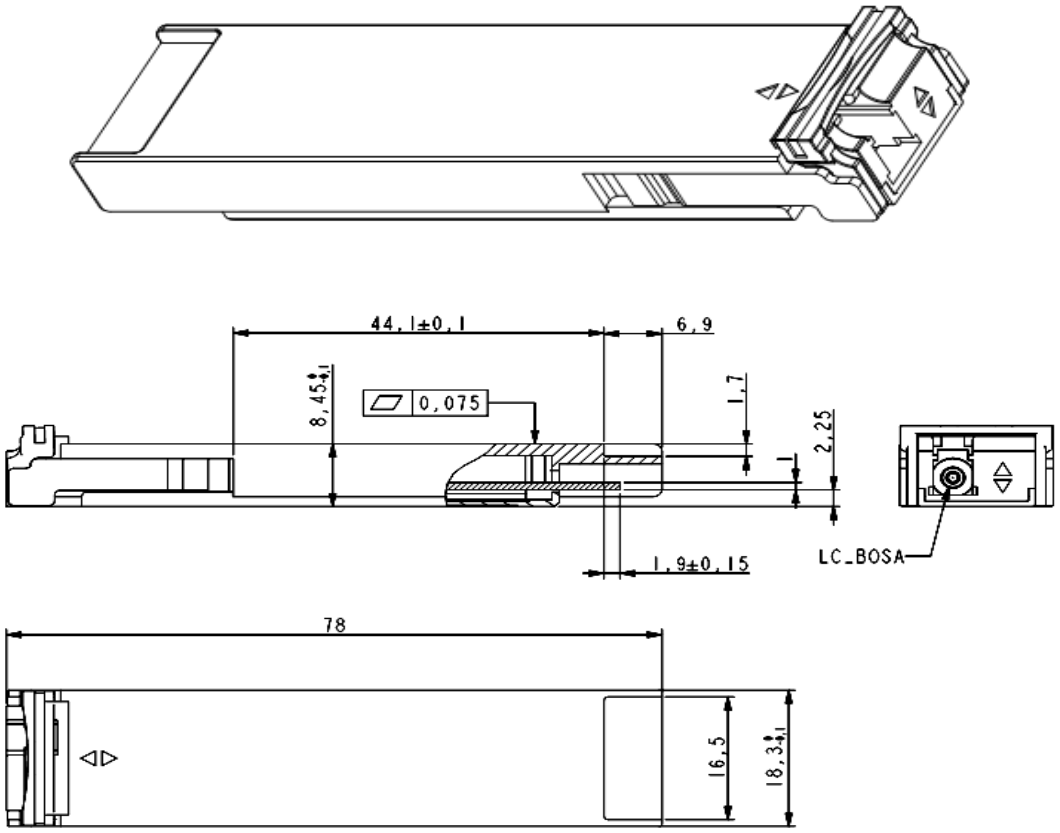

Информация для заказа

Part Number	Product Description
NS-XFP-W23L60D	1270nm DFB laser Transmitter and 1330nm Receiver, 10Gbps, 60km, 0ºC ~ +70ºC
NS-XFP-W32L60D	1330nm DFB laser Transmitter and 1270nm Receiver, 10Gbps, 60km, 0ºC ~ +70ºC

Примечание

Performance figures, data and any illustrative material provided in this data sheet are typical and must be specifically confirmed in writing by New Nets before they become applicable to any particular order or contract. In accordance with theNew Nets policy of continuous improvement specifications may change without notice.

The publication of information in this data sheet does not imply freedom from patent or other protective rights of New Nets or others. Further details are available from any New Nets sales representative.