Проектирование сетей,
поставка оборудования, оптимизация и
поддержка IT-инфраструктуры
newnets.ru
newnets@newnets.ru
8 800 777 57 00

100Gb/s QSFP28 SR4 Optical Transceiver Module

NS-QSFP28-100G-SR4

Product Specification

Features

- QSFP28 MSA compliant
- Compliant to IEEE 802.3bm 100GBASE-SR4
- Four independent full-duplex channels
- Supports 103.1Gb/s aggregate bit rate
- Up to 100m OM4 MMF transmission
- Operating case temperature: 0 to 70°C
- Single 3.3V power supply
- 4x25G electrical interface (OIF CEI-28G-VSR)
- Maximum power consumption 2.5W
- MTP/MPO optical connector



Applications

- Rack to Rack
- Data Center
- Infiniband QDR, DDR and SDR
- 100G Ethernet

Part Number Ordering Information

NS-QSFP28-100G-SR4-MPO	QSFP28 SR4 100m optical transceiver with full real-time digital diagnostic monitoring and pull tab

Проектирование сетей,
поставка оборудования, оптимизация и
поддержка IT-инфраструктуры
newnets.ru
newnets@newnets.ru
8 800 777 57 00

1. General Description

This product is a parallel 100Gb/s Quad Small Form-factor Pluggable (QSFP28) optical module. It provides increased port density and total system cost savings. The QSFP28 full-duplex optical module offers 4 independent transmit and receive channels, each capable of 25Gb/s operation for an aggregate data rate of 100Gb/s on 100 meters of OM4 multi-mode fiber.

An optical fiber ribbon cable with an MTP/MPO connector can be plugged into the QSFP28 module receptacle. Proper alignment is ensured by the guide pins inside the receptacle. The cable usually cannot be twisted for proper channel to channel alignment. Electrical connection is achieved through an MSA-compliant 38-pin edge type connector.

The module operates by a single +3.3V power supply. LVCMOS/LVTTL global control signals, such as Module Present, Reset, Interrupt and Low Power Mode, are available with the modules. A 2-wire serial interface is available to send and receive more complex control signals, and to receive digital diagnostic information. Individual channels can be addressed and unused channels can be shut down for maximum design flexibility.

The product is designed with form factor, optical/electrical connection and digital diagnostic interface according to the QSFP28 Multi-Source Agreement (MSA). It has been designed to meet the harshest external operating conditions including temperature, humidity and EMI interference. The module offers very high functionality and feature integration, accessible via a two-wire serial interface.

2. Functional Description

This product converts parallel electrical input signals into parallel optical signals, by a driven Vertical Cavity Surface Emitting Laser (VCSEL) array. The transmitter module accepts electrical input signals compatible with Common Mode Logic (CML) levels. All input data signals are differential and internally terminated. The receiver module converts parallel optical input signals via a photo detector array into parallel electrical output signals. The receiver module outputs electrical signals are also voltage compatible with Common Mode Logic (CML) levels. All data signals are differential and support a data rates up to 25Gb/s per channel. Figure 1 shows the functional block diagram of this product.

A single +3.3V power supply is required to power up the module. Both power supply pins VccTx and VccRx are internally connected and should be applied concurrently. As per MSA specifications the module offers 7 low speed hardware control pins (including the 2-wire serial interface): ModSelL, SCL, SDA, ResetL, LPMode, ModPrsL and IntL.

Module Select (ModSelL) is an input pin. When held low by the host, the module responds to 2-wire serial communication commands. The ModSelL allows the use of multiple QSFP28 modules on a single 2-wire

interface bus – individual ModSelL lines for each QSFP28 module must be used.

Serial Clock (SCL) and Serial Data (SDA) are required for the 2-wire serial bus communication interface and enable the host to access the QSFP28 memory map.

The ResetL pin enables a complete module reset, returning module settings to their default state, when a low level on the ResetL pin is held for longer than the minimum pulse length. During the execution of a reset the host shall disregard all status bits until the module indicates a completion of the reset interrupt. The module indicates this by posting an IntL (Interrupt) signal with the Data_Not_Ready bit negated in the memory map. Note that on power up (including hot insertion) the module should post this completion of reset interrupt without requiring a reset.

Low Power Mode (LPMode) pin is used to set the maximum power consumption for the module in order to protect hosts that are not capable of cooling higher power modules, should such modules be accidentally inserted.

Module Present (ModPrsL) is a signal local to the host board which, in the absence of a module, is normally pulled up to the host Vcc. When a module is inserted into the connector, it completes the path to ground through a resistor on the host board and asserts the signal. ModPrsL then indicates a module is present by setting ModPrsL to a “Low” state.

Interrupt (IntL) is an output pin. Low indicates a possible module operational fault or a status critical to the host system. The host identifies the source of the interrupt using the 2-wire serial interface. The IntL pin is an open collector output and must be pulled to the Host Vcc voltage on the Host board.

3. Transceiver Block Diagram

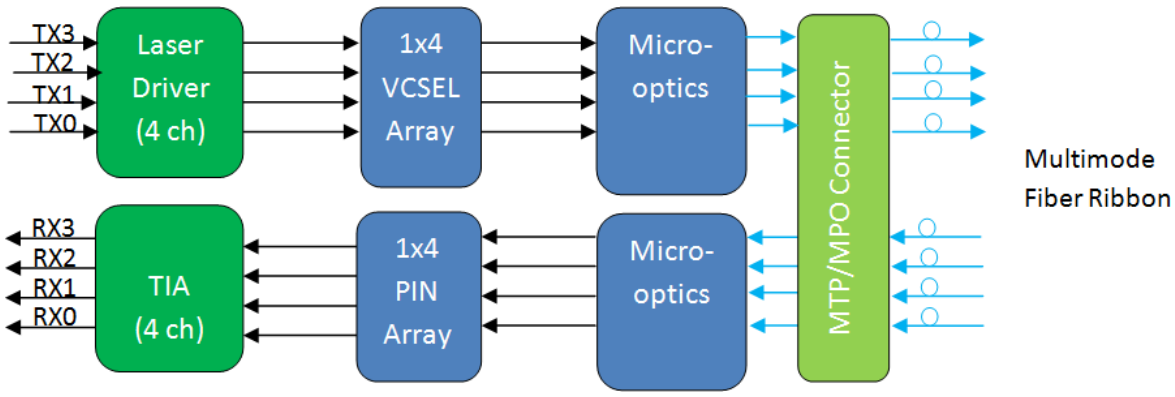

Проектирование сетей,
поставка оборудования, оптимизация и
поддержка IT-инфраструктуры
newnets.ru
newnets@newnets.ru
8 800 777 57 00

Figure 1. Transceiver Block Diagram

4. Pin Assignment and Description

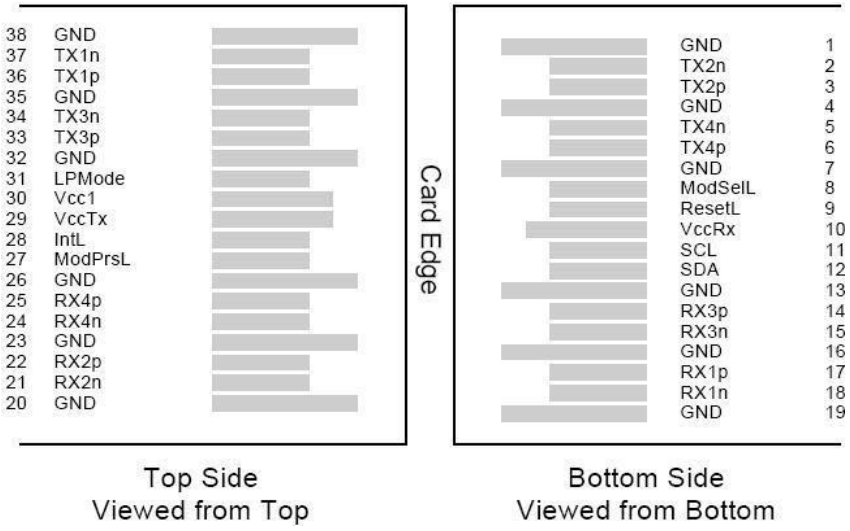

Figure 2. MSA Compliant Connector

Проектирование сетей,
поставка оборудования, оптимизация и
поддержка IT-инфраструктуры
newnets.ru
newnets@newnets.ru
8 800 777 57 00

Pin Definition

PIN	Logic	Symbol	Name/Description	Notes
1		GND	Ground	1
2	CML-I	Tx2n	Transmitter Inverted Data Input	
3	CML-I	Tx2p	Transmitter Non-Inverted Data output	
4		GND	Ground	1
5	CML-I	Tx4n	Transmitter Inverted Data Input	
6	CML-I	Tx4p	Transmitter Non-Inverted Data output	
7		GND	Ground	1
8	LVTLL-I	ModSelL	Module Select	
9	LVTLL-I	ResetL	Module Reset	
10		VccRx	+3.3V Power Supply Receiver	2
11	LVCMOS-I/O	SCL	2-Wire Serial Interface Clock	
12	LVCMOS-I/O	SDA	2-Wire Serial Interface Data	

Проектирование сетей,
поставка оборудования, оптимизация и
поддержка IT-инфраструктуры
newnets.ru
newnets@newnets.ru
8 800 777 57 00

13		GND	Ground	
14	CML-O	Rx3p	Receiver Non-Inverted Data Output	
15	CML-O	Rx3n	Receiver Inverted Data Output	
16		GND	Ground	1
17	CML-O	Rx1p	Receiver Non-Inverted Data Output	
18	CML-O	Rx1n	Receiver Inverted Data Output	
19		GND	Ground	1
20		GND	Ground	1
21	CML-O	Rx2n	Receiver Inverted Data Output	
22	CML-O	Rx2p	Receiver Non-Inverted Data Output	
23		GND	Ground	1
24	CML-O	Rx4n	Receiver Inverted Data Output	1
25	CML-O	Rx4p	Receiver Non-Inverted Data Output	
26		GND	Ground	1
27	LVTTL-O	ModPrsL	Module Present	
28	LVTTL-O	IntL	Interrupt	
29		VccTx	+3.3 V Power Supply transmitter	2
30		Vcc1	+3.3 V Power Supply	2
31	LVTTL-I	LPMode	Low Power Mode	
32		GND	Ground	1
33	CML-I	Tx3p	Transmitter Non-Inverted Data Input	
34	CML-I	Tx3n	Transmitter Inverted Data Output	
35		GND	Ground	1
36	CML-I	Tx1p	Transmitter Non-Inverted Data Input	
37	CML-I	Tx1n	Transmitter Inverted Data Output	
38		GND	Ground	1

Notes:

1. GND is the symbol for signal and supply (power) common for QSFP28 modules. All are common within the QSFP28 module and all module voltages are referenced to this potential unless otherwise noted. Connect these directly to the

host board signal common ground plane.

2. VccRx, Vcc1 and VccTx are the receiver and transmitter power suppliers and shall be applied concurrently. Recommended host board power supply filtering is shown in Figure 4 below. Vcc Rx, Vcc1 and Vcc Tx may be internally connected within the QSFP28 transceiver module in any combination. The connector pins are each rated for a maximum current of 1000mA.

Проектирование сетей,
поставка оборудования, оптимизация и
поддержка IT-инфраструктуры
newnets.ru
newnets@newnets.ru
8 800 777 57 00

5. Optical Interface Lanes and Assignment

Figure 3 shows the orientation of the multi-mode fiber facets of the optical connector. Table 1 provides the lane assignment.

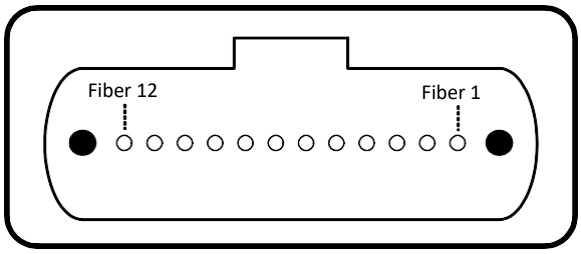

Figure 3. Outside View of the QSFP28 Module MPO Receptacle

Table 1: Lane Assignment

Fiber #	Lane Assignment
1	RX0
2	RX1
3	RX2
4	RX3
5,6,7,8	Not used
9	TX3
10	TX2
11	TX1
12	TX0

Проектирование сетей,
поставка оборудования, оптимизация и
поддержка IT-инфраструктуры
newnets.ru
newnets@newnets.ru
8 800 777 57 00

6. Recommended Power Supply Filter

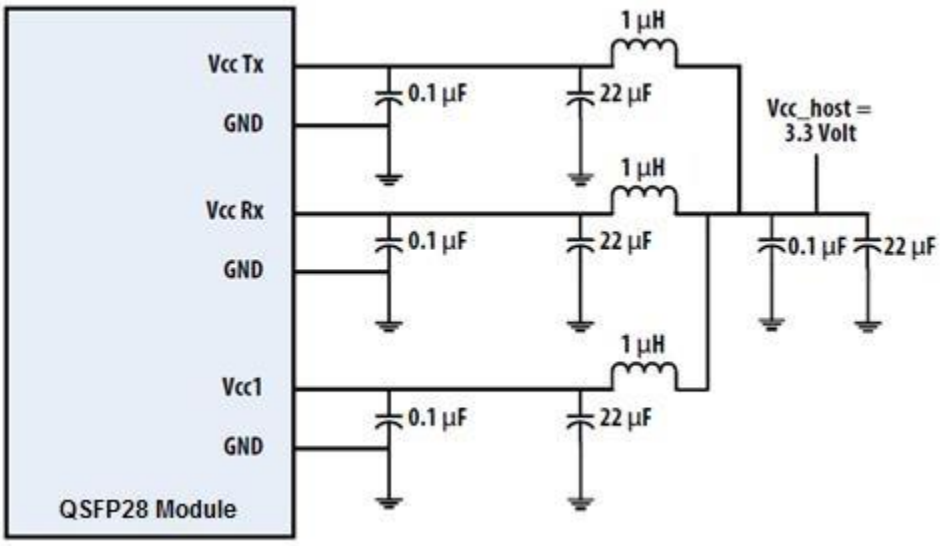

Figure 4. Recommended Power Supply Filter

7. Absolute Maximum Ratings

It has to be noted that the operation in excess of any individual absolute maximum ratings might cause permanent damage to this module.

Parameter	Symbol	Min	Max	Units	Note
Storage Temperature	T_S	-40	85	degC	
Operating Case Temperature	T_{OP}	0	70	degC	
Power Supply Voltage	V_{CC}	-0.5	3.6	V	
Relative Humidity (non-condensation)	RH	0	85	%	
Damage Threshold, each Lane	TH_d	3.4		dBm	

8. Recommended Operating Conditions and Power Supply Requirements

Parameter	Symbol	Min	Typical	Max	Units
Operating Case Temperature	T_{OP}	0		70	degC
Power Supply Voltage	V_{CC}	3.135	3.3	3.465	V
Data Rate, each Lane			25.78125		Gb/s
Data Rate Accuracy		-100		100	ppm

Проектирование сетей,
поставка оборудования, оптимизация и
поддержка IT-инфраструктуры
newnets.ru
newnets@newnets.ru
8 800 777 57 00

9. Electrical Characteristics

The following electrical characteristics are defined over the Recommended Operating Environment unless otherwise specified.

Parameter	Test Point	Min	Typical	Max	Units	Notes
Power Consumption				2.5	W	
Supply Current	Icc			757	mA	
Transmitter (each Lane)						
Overload Differential Voltage pk-pk	TP1a	900			mV	
Common Mode Voltage (Vcm)	TP1	-350		2850	mV	1
Differential Termination Resistance Mismatch	TP1			10	%	At 1MHz
Differential Return Loss (SDD11)	TP1			See CEI-28G-VSR Equation 13-19	dB	
Common Mode to Differential conversion and Differential to Common Mode conversion (SDC11, SCD11)	TP1			See CEI-28G-VSR Equation 13-20	dB	
Stressed Input Test	TP1a	See CEI-28G-VSR Section 13.3.11.2.1				
Receiver (each Lane)						
Differential Voltage, pk-pk	TP4			900	mV	
Common Mode Voltage	TP4	-350		2850	mV	1

Проектирование сетей,
поставка оборудования, оптимизация и
поддержка IT-инфраструктуры
newnets.ru
newnets@newnets.ru
8 800 777 57 00

(Vcm)						
Common Mode Noise, RMS	TP4			17.5	mV	
Differential Termination Resistance Mismatch	TP4			10	%	At 1MHz
Differential Return Loss (SDD22)	TP4			See CEI-28G-VSR Equation 13-19	dB	
Common Mode to Differential conversion and Differential to Common Mode conversion (SDC22, SCD22)	TP4			See CEI-28G-VSR Equation 13-21	dB	
Common Mode Return Loss (SCC22)	TP4			-2	dB	2
Transition Time, 20 to 80%	TP4	9.5			ps	
Vertical Eye Closure (VEC)	TP4			5.5	dB	
Eye Width at 10^{-15} probability (EW15)	TP4	0.57			UI	
Eye Height at 10^{-15} probability (EH15)	TP4	228			mV	

Notes:

1. Vcm is generated by the host. Specification includes effects of ground offset voltage.
2. From 250MHz to 30GHz.

Проектирование сетей,
поставка оборудования, оптимизация и
поддержка IT-инфраструктуры
newnets.ru
newnets@newnets.ru
8 800 777 57 00

10. Optical Characteristics

Parameter	Symbol	Min	Typical	Max	Units	Notes
Transmitter						
Center Wavelength	λ_C	840	850	860	nm	
RMS Spectral Width	$\Delta\lambda_{rms}$			0.6	nm	
Average Launch Power, each	P_{AVG}	-8.4		2.4	dBm	
Lane						
Optical Modulation Amplitude (OMA), each Lane	P_{OMA}	-6.4		3.0	dBm	1
Launch Power in OMA minus TDEC, each Lane		-7.3			dBm	
Transmitter and Dispersion Eye Closure (TDEC), each Lane				4.3	dB	
Extinction Ratio	ER	2.0			dB	
Optical Return Loss Tolerance	TOL			12	dB	
Average Launch Power OFF Transmitter, each Lane	Poff			-30	dBm	
Encircled Flux		≥ 86% at 19 μm ≤ 30% at 4.5 μm				
Transmitter Eye Mask Definition {X1, X2, X3, Y1, Y2, Y3}		{0.3, 0.38, 0.45, 0.35, 0.41, 0.5}				2
Receiver						
Center Wavelength	λ_C	840	850	860	nm	
Damage Threshold, each Lane	TH_d	3.4			dBm	3
Average Receive Power, each Lane		-10.3		2.4	dBm	
Receive Power (OMA), each Lane				3.0	dBm	

Проектирование сетей,
поставка оборудования, оптимизация и
поддержка IT-инфраструктуры
newnets.ru
newnets@newnets.ru
8 800 777 57 00

Receiver Sensitivity (OMA), each Lane	SEN			-9.2	dBm	for BER = $5x10^{-5}$
Stressed Receiver Sensitivity (OMA), each Lane				-5.2	dBm	4
Receiver Reflectance	R_R			-12	dB	
LOS Assert	LOSA	-30			dBm	
LOS Deassert	LOSD			-12	dBm	
OS Hysteresis	LOSH	0.5			dB	

Conditions of Stress Receiver Sensitivity Test (Note 5)						
Stressed Eye Closure (SEC), Lane under Test			4.3		dB	
Stressed Eye J2 Jitter, Lane under Test			0.39		UI	
Stressed Eye J4 Jitter, Lane under Test				0.53	UI	
OMA of each Aggressor Lane			3		dBm	
Stressed Receiver Eye Mask Definition {X1, X2, X3, Y1, Y2, Y3}, Hit ratio $5x10^{-5}$ hits per sample		{0.28, 0.5, 0.5, 0.33, 0.33, 0.4}				

Проектирование сетей,
поставка оборудования, оптимизация и
поддержка IT-инфраструктуры
newnets.ru
newnets@newnets.ru
8 800 777 57 00

Notes:

1. Even if the TDP < 0.9 dB, the OMA min must exceed the minimum value specified here.
2. Hit ratio $1.5x10^{-3}$ hits per sample.
3. The receiver shall be able to tolerate, without damage, continuous exposure to a modulated optical input signal having this power level on one lane. The receiver does not have to operate correctly at this input power.
4. Measured with conformance test signal at receiver input for BER = $5x10^{-5}$.
5. Vertical eye closure penalty, stressed eye J2 jitter, stressed eye J4 jitter, and stressed receiver eye mask definition are test conditions for measuring stressed receiver sensitivity. They are not characteristics of the receiver.

Проектирование сетей,
поставка оборудования, оптимизация и
поддержка IT-инфраструктуры
newnets.ru
newnets@newnets.ru
8 800 777 57 00

11. Digital Diagnostic Functions

The following digital diagnostic characteristics are defined over the Recommended Operating Environment unless otherwise specified. It is compliant to SFF-8436.

Parameter	Symbol	Min	Max	Units	Notes
Temperature monitor absolute error	DMI_Temp	-3	3	degC	Over operating temperature range
Supply voltage monitor absolute error	DMI _VCC	-0.15	0.15	V	Over full operating range
Channel RX power monitor absolute error	DMI_RX_Ch	-2	2	dB	1
Channel Bias current monitor	DMI_Ibias_Ch	-10%	10%	mA	Ch1~Ch4
Channel TX power monitor absolute error	DMI_TX_Ch	-2	2	dB	1

Notes:

1. Due to measurement accuracy of different single mode fibers, there could be an additional +/-1 dB fluctuation, or a +/- 3 dB total accuracy.

12. Mechanical Dimensions

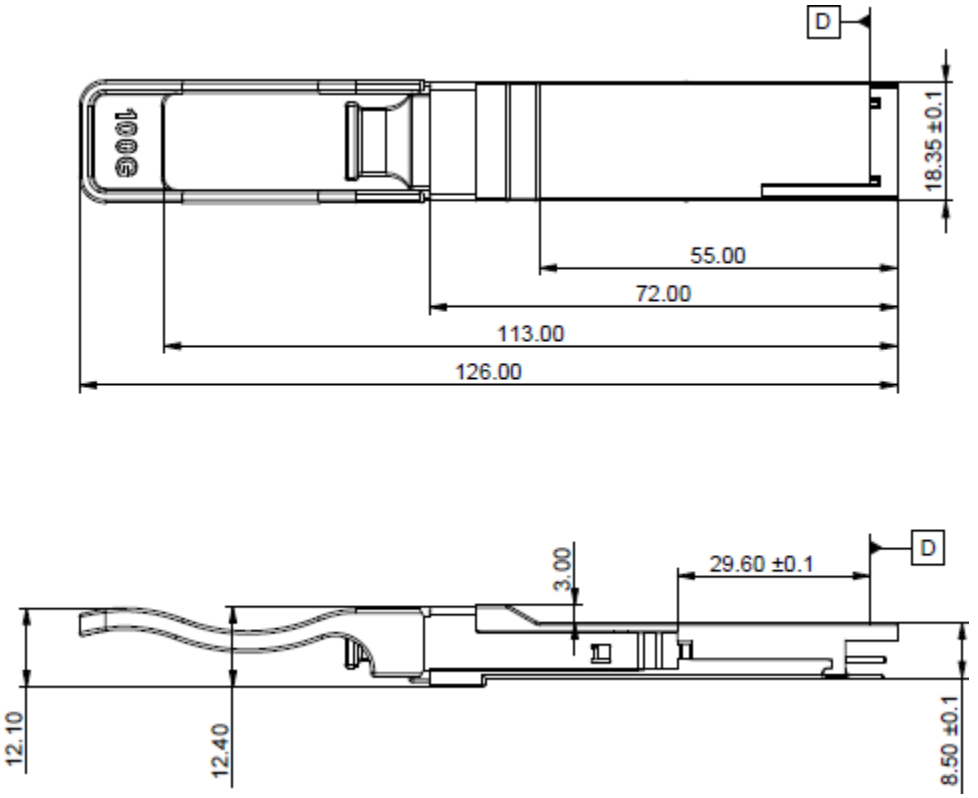

Figure 5. Mechanical Outline

13. ESD

This transceiver is specified as ESD threshold 1kV for high speed data pins and 2kV for all others electrical input pins, tested per MIL-STD-883, Method 3015.4 /JESD22-A114-A (HBM). However, normal ESD precautions are still required during the handling of this module. This transceiver is shipped in ESD protective packaging. It should be removed from the packaging and handled only in an ESD protected environment.

14. Laser Safety

This is a Class 1 Laser Product according to EN 60825-1:2014. This product complies with 21 CFR 1040.10 and 1040.11 except for deviations pursuant to Laser Notice No. 50, dated (June 24, 2007).

Caution: Use of controls or adjustments or performance of procedures other than those specified herein may result in hazardous radiation exposure.