25G SFP28 Direct Attach Passive Copper Cables

SFP28-25G-CU*M

1、Description

25g SFP28 passive cable uses shielded high-speed differential cable, whichIt conforms to 25g Ethernet ieee802.3by standard and sff-8402 sfp28 standard, supports 25g transmission rate, and is also downward compatible with low rate applications. Sfp28 passive cable is the preferred solution for 25g rate short distance application, which is widely used in data transmission between data center and cabinet or between adjacent cabinets. Its biggest characteristics are low cost, ultra-low power consumption (less than 0.1W) and high reliability.

2、Features

- Support for multi-gigabit data rates up to 25Gbps
- Hot-pluggable
- I/O Connector designed for high speed differential signal applications
- Improved Pluggable FormFactor(IPF) compliant for enhanced EMI/EMC performance
- Compatible to SFF-8402 and SFF-8432
- Compatible to SFP28 MSA
- Compatible to IEEE 802.3ba
- Power Supply :+3.3V
- Low power consumption: 0.02 W (typ.)
- Temperature Range: 0~ 70 °C
- Comply with RoHS 6.0



3、Applications

- 25g Ethernet
- High capacity I/O in Storage Area Networks, Network Attached Storage, and Storage Servers
- Switched fabric I/O such as ultra high bandwidth switches and routers
- Data center cabling infrastructure
- High density connections between networking equipment

4、Recommended Operating Conditions

Parameter	Symbol	Min	Typical	Max	Unit
Storage Ambient Temperature		-40		+85	°C
Operating Case Temperature	Tc	0		+70	°C
Power Supply Voltage	VCC3	3.14	3.3	3.47	V
Power consumption				0.1	W
Data Rate Per Lane		1		25.78	Gb/s

5、High Speed Characteristics

Parameter	Symbo	Min	Typical	Ma	Unit	Note
Differential Impedance	*RIN,P-P*	90		110	Ω	
Insertion loss	*SDD21*			22.48	dB	At 12.8906 GHz
Differential Return Loss	*SDD11*			See 1	dB	At 0.05 to 4.1 GHz
	SDD22			See 2	dB	At 4.1 to 19 GHz
Common-mode to mmon-mode output return loss	*SCC11*	2			dB	At 0.2 to 19 GHz
	SCC22					
Differential to common-mode return loss	*SCD11*			See 3	dB	At 0.01 to 12.89
	SCD22			See		At 12.89 to 19 GHz
Differential to common Mode Conversion Loss	*SCD21*			10	dB	At 0.01 to 12.89
				See 5		At 12.89 to 15.7
				6.3		At 15.7 to 19 GHz
Channel Operating Margin	*COM*	3			dB	

Notes:

1. Reflection Coefficient given by equation SDD11(dB) < 16.5 - 2 × SQRT(f), with f in GHz
2. Reflection Coefficient given by equation SDD11(dB) < 10.66 - 14 × log10(f/5.5), with f in GHz
3. Reflection Coefficient given by equation SCD11(dB) < 22 - (20/25.78)*f, with f in GHz
4. Reflection Coefficient given by equation SCD11(dB) < 15 - (6/25.78)*f, with f in GHz
5. Reflection Coefficient given by equation SCD21(dB) < 27 - (29/22)*f, with f in GHz

6、Pin Descriptions

Pin	Logic	Symbol	Name/Description	Notes
1		VeeT	Transmitter Ground	
2	LV-TTL-O	TX_Fault	N/A	1
3	LV-TTL-I	TX_DIS	Transmitter Disable	2
4	LV-TTL-I/O	SDA	Tow Wire Serial Data	
5	LV-TTL-I	SCL	Tow Wire Serial Clock	
6		MOD_DEF0	Module present, connect to VeeT	
7	LV-TTL-I	RS0	N/A	1
8	LV-TTL-O	LOS	LOS of Signal	2
9	LV-TTL-I	RS1	N/A	1
10		VeeR	Reciever Ground	
11		VeeR	Reciever Ground	
12	CML-O	RD-	Reciever Data Inverted	
13	CML-O	RD+	Reciever Data Non-Inverted	
14		VeeR	Reciever Ground	
15		VccR	Reciever Supply 3.3V	
16		VccT	Transmitter Supply 3.3V	
17		VeeT	Transmitter Ground	
18	CML-I	TD+	Transmitter Data Non-Inverted	
19	CML_I	TD-	Transmitter Data Inverted	
20		VeeT	Transmitter Ground	

1.Signals not supported in SFP+ Copper pulled-down to VeeT with 30K ohms resistor
2.Passive cable assemblies do not support LOS andTX_DIS

7、Mechanical Dimensions

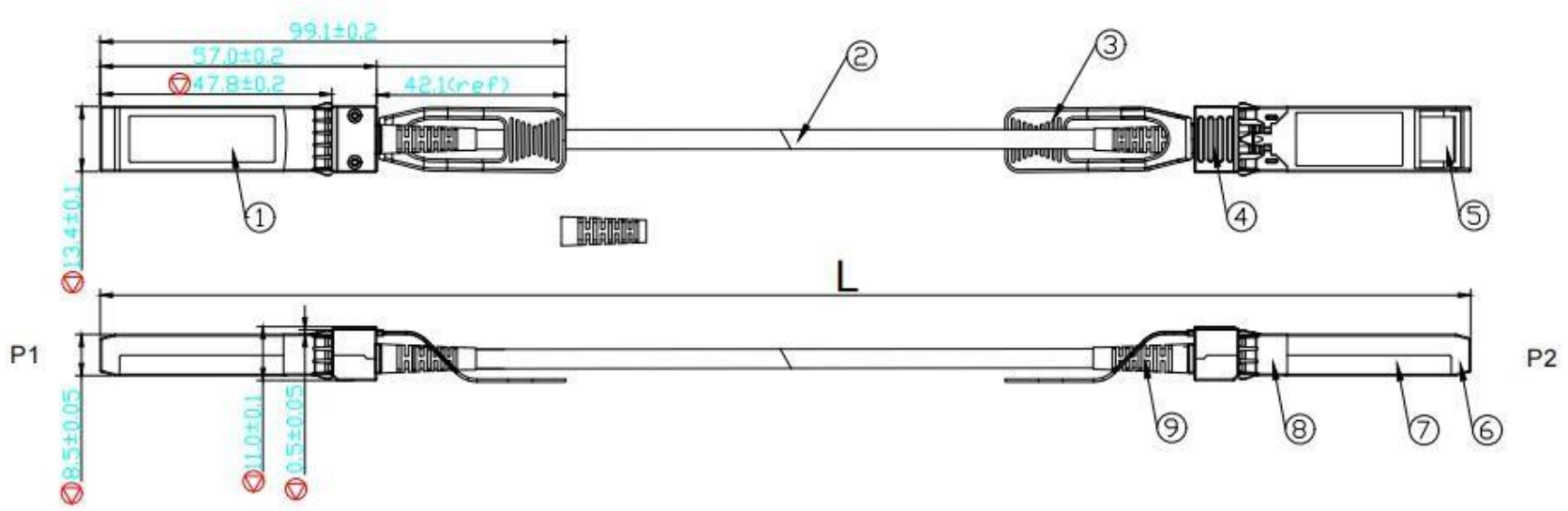

8、Ordering information

Part Number	Product Description
SFP28-25G-CU1M	SFP+ Direct Attach Passive Cable (10GSFP+Cu), 1m, AWG:30 , 0ºC ~ +70ºC
SFP28-25G-CU2M	SFP+ Direct Attach Passive Cable (10GSFP+Cu), 2m, AWG:30 , 0ºC ~ +70ºC
SFP28-25G-CU3M	SFP+ Direct Attach Passive Cable (10GSFP+Cu), 3m, AWG:26 , 0ºC ~ +70ºC
SFP28-25G-CU5M	SFP+ Direct Attach Passive Cable (10GSFP+Cu),5m, AWG:26, 0ºC ~ +70ºC

Note: You can be customized diameter and distance.

9、Important Notice

Performance figures, data and any illustrative material provided in this data sheet are typical and must be specifically confirmed in writing by company before they become applicable to any particular order or contract. In accordance with company policy of continuous improvement specifications may change without notice. The publication of information in this data sheet does not imply freedom from patent or other protective rights of company or others. Further details are available from any company sales representative.