NS-XFP-10G-ER40D

10Gbps XFP Optical Transceiver, 40km Reach

Features

- Supports 10GBE Application at the Data-Rate of 9.953Gbps to 10.3125Gbps
- Maximum link length of 40km with SMF
- 1550nm cooled EML laser and PIN photodiode
- XFP MSA package with duplex LC connector
- XFI High Speed Electrical Interface
- +5V, +3.3V,+1.8V power supply
- Low Power Dissipation 3.5W Maximum
- 2-wire interface for management and diagnostic monitorCompatible with RoHS
- Compatible with IEEE 802.3ae 10 Gigabit Ethernet
- Compatible with Sonet OC-192/SDH STM-64



NETS
Новый взгляд на сети

Applications

- SONET(OC-192)/SDH(STM64)
- 10GE Ethernet
- 10G Fiber Channel

Product Description

40km XFP NS-XFP-10G-ER40D transceiver comply with XFP MSA, and can support diverse applications for SDH/Sonet equipment including FEC (9.95Gb/s to 10.7Gb/s),as well as Ethernet LAN(10.325Gb/s) and WAN(9.95Gb/s) applications. The high performance cooled 1550nm cooled EML transmitter and high sensitivity PIN receiver provide superior performance for SONET /SDH and Ethernet applications at up to 40km links. Digital diagnostics functions are available via a 2-wire serial interface, as specified in the XFP MSA.

Absolute Maximum Ratings

Parameter	Symbol	Min	Max	Unit
Supply Voltage 1	Vcc1.8	-0.5	2.0	V
Supply Voltage 2	Vcc3.3	-0.5	4.0	V
Supply Voltage 3	Vcc5.0	-0.5	6.0	V
Storage Temperature	Tst	-40	85	ºC
Optical Input Received Power	PIN	-	+4	dBm

Operating Conditions

Parameter	Symbol	Min	Typical	Max	Unit
Supply Voltage 1	Vcc3	3.13	3.3	3.47	V
Supply current 1	Icc3			750	mA
Supply Voltage 2	Vcc5	4.75	5	5.25	V
Supply current 2	Icc5			500	mA
Supply Voltage 3	Vcc2	1.71	1.8	1.89	V
Supply current 3	Icc2			750	mA
Operating Case temperature	Tca	-5	-	70	ºC
Module Power Dissipation	Pm	-		3.5	W

Transmitter Specifications – Optical

Parameter	Symbol	Min	Typical	Max	Unit
Data Rate Multirate	Mra	9.95	-	11.3	Gbps
Center Wavelength	λ_c	1528	1550	1565	pm
Optical Transmit Power	Po	-1	-	+2	dBm
Optical Transmit Power (disabled)	PTX_DISABLE	-	-	-40	dBm
Extinction Ratio	ER	8.2		-	dB
Channel Spacing	Δf	-	100	-	GHz
Jitter Generation	TJP-P	-	-	0.1	UI
Spectral Width (-20dB)	DI20	-	0.1	0.3	nm
Side Mode Suppression Ratio	SMSR	30	-	-	dB
Dispersion penalty(800ps/nm)	DP			2	dB
Eye Mask	Compliant with ITU-T G.691 STM-64 eye mask				

Проектирование сетей,
поставка оборудования, оптимизация и
поддержка IT-инфраструктуры

newnets.ru
newnets@newnets.ru
8 800 777 57 00

Transmitter Specifications – Electrical

Parameter	Symbol	Min	Typical	Max	Unit
Input differential impedance	Rim	-	100	-	Ω
Differential data Input	VtxDIFF	120	-	1000	mV
Transmit Disable Voltage	VD	2.0	-	Vcc3+0.3	V
Transmit Enable Voltage	Ven	0	-	+0.8	V
Transmit Disable Assert Time	Vn	-	-	10	us

PIN Receiver Specifications – Optical

Parameter	Symbol	Min	Typical	Max	Unit
Data Rate	Dt	9.95	-	11.3	Gbps
Receiver Sensitivity	Rsens	-	-	-16	dBm
Maximum Input Power	RX-overload	-	-	-1	dBm
Input Operating Wavelength	⅄	1260	-	1620	nm
Reflectance	Rrx	-	-	-27	dB
Loss of Signal Asserted		-28	-	-	dBm
LOS De-Asserted		-	-	-22	dBm
LOS Hysteresis		0.5	-	-	dB

PIN Receiver Specifications – Electrical

Parameter	Symbol	Min	Typical	Max	Unit
Differential Output Swing	Vout P-P	400	-	800	mV
Rise/Fall Time	Tr / Tf	24	-	-	ps
Loss of Signal –Asserted	VOH	2	-	Vcc3+0.3-	V
Loss of Signal –Negated	VOL	0	-	+0.8	V

Low Speed Electrical Signal Timings

Parameter	Symbol	Min	Typical	Max	Unit
TX Disable, Power_Down/RST	VIH	2.0		Vcc3+0.3	V
	VIL	-0.3		0.8	V
Interrupt, Mod_NR, Rx_Los	VOH	Vdd3-0.5		Vdd3+0.3	V
	VOL	0		0.4	V
SCL,SDA(IN)	VIH	Vdd3*0.7		Vdd3+0.5	V
	VIL	-0.3		Vdd3*0.3	V
SCL,SDA(OUT)	VOH	Vdd3-0.5		Vdd3+0.3	V
	VOL	0		0.4	V
I2C clock rate	t_reset		-	400	KHz
Leakage current	IL	-	-	100	uA

Pin Descriptions

Pin	Logic	Symbol	Name/Description	Note
1		GND	Module Ground	1
2		VEE5	Optional -5.2V Power Supply (Not requireed)	
3	LVTTL-I	MOD_DESEL	Module De-select; When held low allows the module to respond to 2-wire serial interface	
4	LVTTL-O	INTb	Interrupt; Indicates presence of an important condition which can be read via the 2-wire serial interface	2
5	LVTTL-I	TX_DIS	Transmitter Disable; Turns off transmitter laser output	
6		VCC5	+5V Power Supply	
7		GND	Module Ground	1
8		VCC3	+3.3V Power Supply	
9		VCC3	+3.3V Power Supply	
10	LVTTL-I/O	SCL	2-Wire Serial Interface Clock	2
11	LVTTL-I/O	SDA	2-Wire Serial Interface Data Line	2
12	LVTTL-O	MOD_Abs	Indicates Module is not present. Grounded in the Module	2
13	LVTTL-O	MOD_NR	Module Not Ready; Indicating Module Operational Fault	2
14	LVTTL-O	RX_LOS	Receiver Loss Of Signal Indicator	2
15		GND	Module Ground	1
16		GND	Module Ground	1
17	CML-O	RDN	Receiver Inverted Data Output	
18	CML-O	RDP	Receiver Non-Inverted Data Output	
19		GND	Module Ground	1
20		VCC2	+1.8V Power Supply	3

21	LVTTL-I	P_DOWN/RST	Power down; When high, requires the module to limit power consumption to 1.5W or below. 2-Wire serial interface must be functional in the low power mode.	
			Reset; The falling edge initiates a complete reset of the module including the2-wire serial interface, equivalent to a power cycle.	
22		V_{CC2}	+1.8V Power Supply	3
23		GND	Module Ground	1
24	PECL-I	REFCLKP	Not used, internally terminated to 50ohm (100ohm diff).	4
25	PECL-I	REFCLKN	Not used, internally terminated to 50ohm (100ohm diff).	4
26		GND	Module Ground	1
27		GND	Module Ground	1
28	CML-I	TDN	Transmitter Inverted Data Input	
29	CML-I	TDP	Transmitter Non-Inverted Data Input	
30		GND	Module Ground	1

Notes:
1. Module circuit ground is isolated from module chassis ground within the module.
2. Open collector; should be pulled up with 4.7k – 10k ohms on host board to a voltage between 3.15Vand 3.6V.
3. A Reference Clock input is not required.

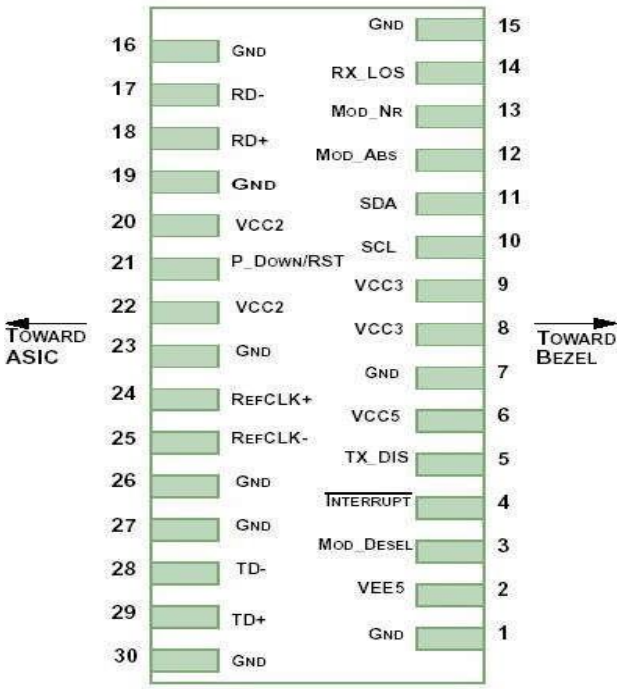

Figure1.Electrical Pin-out Details

Digital Diagnostic Functions

Small Form Factor 10Gb/s (XFP) transceivers are compliant with the current XFPMulti-Source Agreement (MSA) Specification Rev 4.5.
As defined by the XFP MSA, XFP transceivers provide digital diagnostic functions via a 2-wireserial interface, which allows real-time access to the following operating parameters:

- Transceiver temperature
- Laser bias current
- Transmitted optical power
- Received optical power
- Transceiver supply voltage

It also provides a sophisticated system of alarm and warning flags, which may be used to alert end-users when particular operating parameters are outside of a factory-set normal range.

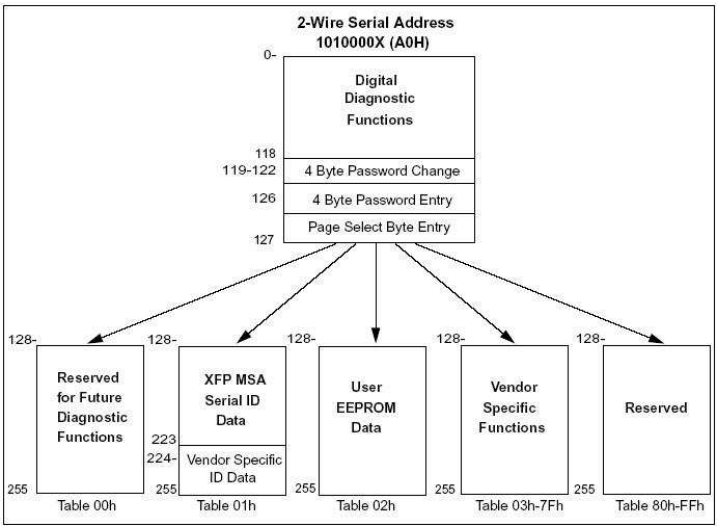

Figure1.2-wire Serial Digital Diagnostic Memory Map

The operating and diagnostics information is monitored and reported by a Digital Diagnostics Transceiver Controller inside the transceiver, which is accessed through the 2-wire serial interface. When the serial protocol is activated, the serial clock signal (SCL pin) is generated by the host. The positive edge clocks data into the XFP transceiver into those segments of its memory map that are not write-protected. The negative edge clocks data from the XFP transceiver. The serial data signal (SDA pin) is bi-directional for serial data transfer. The host uses SDA in conjunction with SCL to mark the start and end of serial protocol activation. The memories are organized as a series of 8-bit data words that can be addressed individually or sequentially. The 2-wire serial interface provides sequential or random access to the 8 bit parameters, addressed from 000h to the maximum address of the memory.

EEPROM Serial ID Memory Contents(Table 01h):

Data Address	Field Size (Bytes)	Name of Field	Description and Contents
Base ID Fields			
128	1	Identifier	Type of Serial transceiver (06h=XFP)
129	1	Ext. Identifier	TX Ref Clock Input not Required (90h)
130	1	Connector	Code of optical connector type (07h=LC)
131-138	8	Transceiver	10GBASE-ER/W(22 00 00 00 20 00 00 00)
139	1	Encoding	NRZ(10h)
140	1	BR-MIN	9.953Gbps(63h)
141	1	BR-MAX	11.3Gbps(71h)
142	1	Length(SMF)-km	40KM(28h)
143	1	Length(E-50um)	(00h)
144	1	Length(50um)	(00h)
145	1	Length(62.5um)	(00h)
146	1	Length(Copper)	(00h)
147	1	Device Tech	Cooled1550nm EML, PIN Detector(74h)
148-163	16	Vendor Name	XFP vendor name: “NewNets” (ASCII)
164	1	CDR Support	CDR supports 9.953Gbps~11.1Gbps(F8h)
165-167	3	Vendor OUI	XFP transceiver vendor OUI ID
168-183	16	Vendor PN	Part Number: “GXC-xx192-04c” (ASCII)
184-185	2	Vendor rev	“32 61” means 2a revision (ASCII)
186-187	2	Wavelength	Wavelength
188-189	2	Wavelength Tolerance	+/-6.5nm
190	1	Max Case Temp	70°C(46h)
191	1	CC_BASE	Check sum of bytes 128~190
192-195	4	Power Supply	3.5W(MAX) (AF 96 A7 01)
196-211	16	Vendor SN	Serial number (ASCII)
212-219	8	Date code	Year(2 bytes), Month(2 bytes), Day (2 bytes)
220	1	Diagnostic type	No BER Support, Average Power(08h)
221	1	Enhanced option	Optional Soft Tx_Disable and P_Down(60h)
222	1	Aux Monitoring	+5.0V and +3.3V Supply Voltage(67h)
223	1	CC_EXT	Check sum of bytes 192~222
Vendor Specific ID fields			
224-255	32	Vendor specific	Vendor specific

Figure3. Recommended Host Board Power Supply Circuit

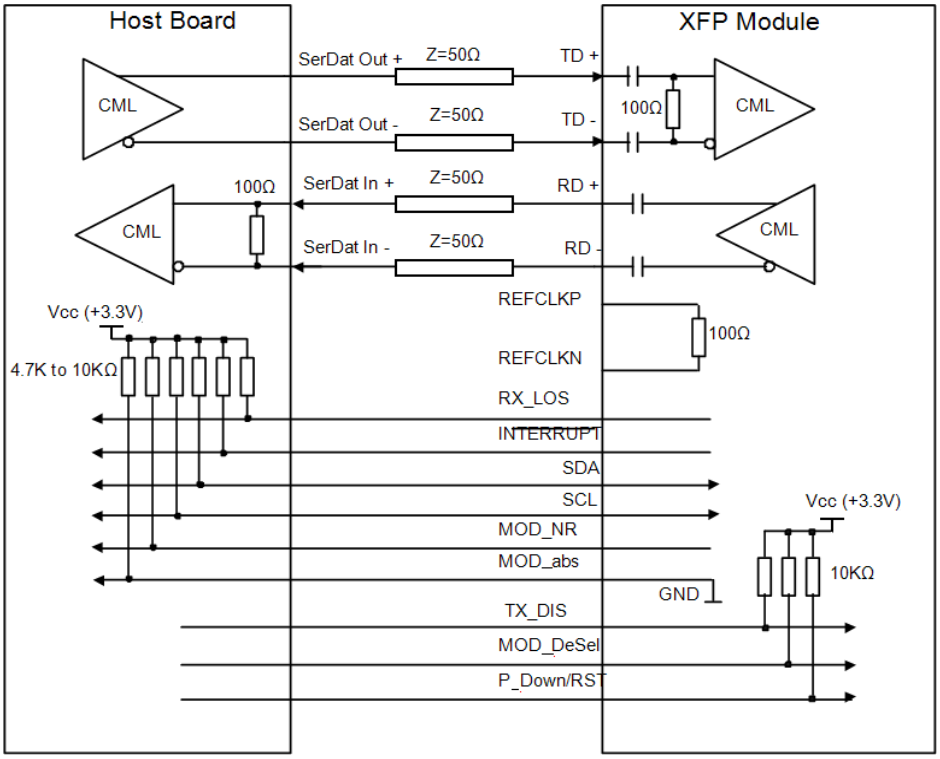

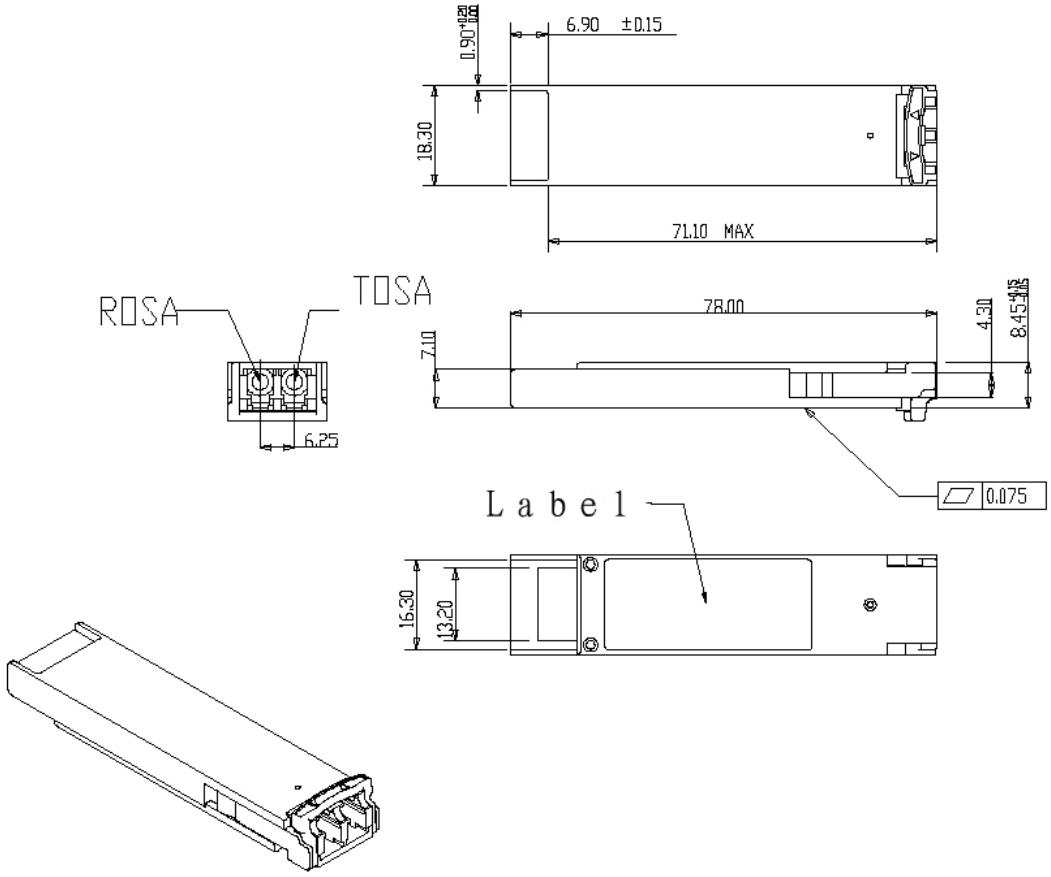

Figure6. Mechanical Specifications