EPON OLT SFP Transceiver

Product Features

- SC BIDI SFP Single Mode Transceiver
- Compliant with SFP MSA and SFF-8472
- Hot-pluggabl
- Single +3.3 Power Supply
- Complies with Telcordia (Bellcore) GR-468-CORE
- 1490nm Continuous Mode Transmitter and 1310nm Burst Mode APD-TIA Receiver
- Typical data rate 1.25 Gbps, Maximal reach 20km
- Comply with China Telecom EPON equipment technical requirement V2.1 1000BASE-PX20+

Product Applications

- GEPON OLT For P2MP Application

General

The AS60-PE43204-CPSS transceiver with supports data rate of typical 1.25 Gbps for GEPON OLT application up to 20km transmission distance, it's designed meeting with China Telecom EPON equipment technical requirement V2.1 1000BASE-PX20+ specifications. SCrececptacle is for optical interface.

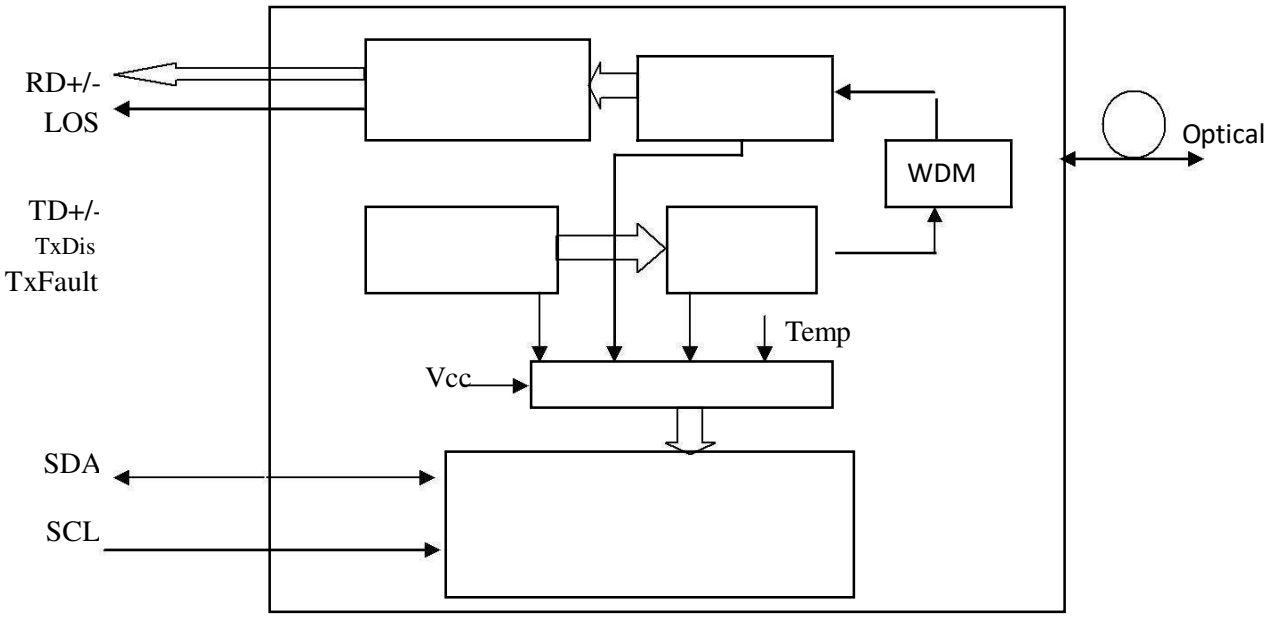

Fig 1 Transceiver Block Diagram

The module provides digital diagnostic information of its operating conditions and status, including transmitting power, laser bias, receiver input optical power, module temperature, and supply voltage. Calibration and alarm/warning threshold data are written and stored in internal memory (EEPROM). The memory map is compatible with SFF-8472, as shown in Fig. 2. The diagnostic data are raw A/D values and must be converted to real world units using calibration constants storedin EEPROM locations 56 – 95 in A2h.

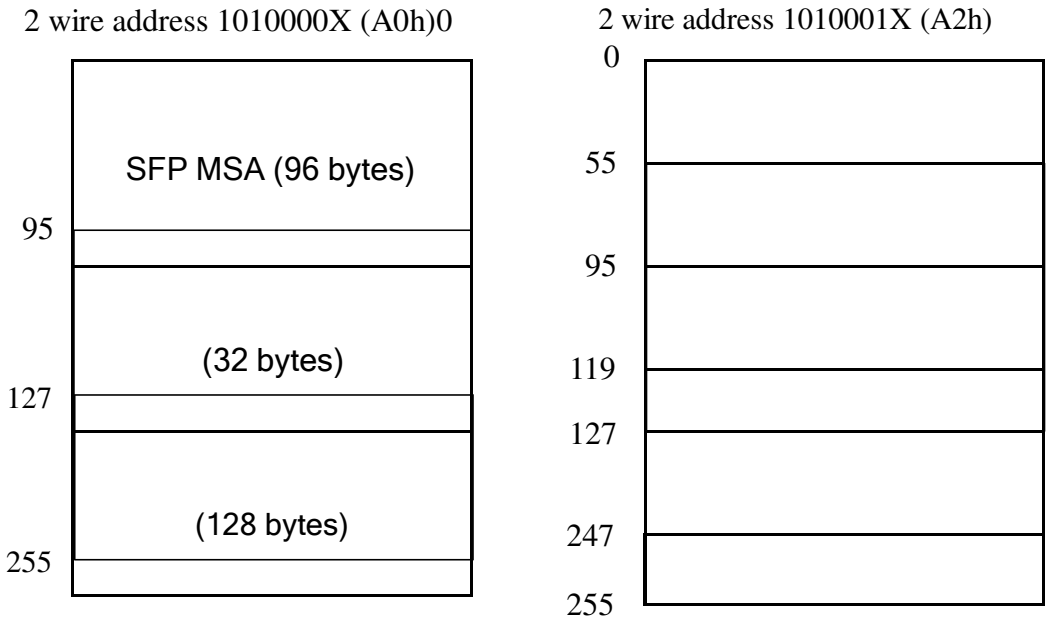

Fig 2 EEPROM Information

Performance Specifications

Absolute Maximum Ratings					
Parameter	**Symbol**	**Min.**	**Max.**	**Unit**	**Note**
Storage Temperature	Tst	-40	+85	°C	
Operating Case Temperature	Tc	0	70	°C	
Input Voltage	-	GND	Vcc	V	
Power Supply Voltage	Vcc-Vee	-0.5	+3.6	V	

Recommended Operating Conditions						
Parameter	**Symbol**	**Min.**	**Typical**	**Max.**	**Unit**	**Note**
Power Supply Voltage	Vcc	3.135	3.3	3.465	V	
Operating Case Temperature	Tc	0	-	70	°C	
Data Rate	DR	-	1.25	-	Gbps	
Total Supply Current	-	-	-	400	mA	
Damage Threshold For Receiver	-	-	-	4	dBm	

Optical Specification						
Transmitter						
Parameter	**Symbol**	**Min.**	**Typ.**	**Max.**	**Unit**	**Note**
Optical Central Wavelength	λ	1480	1490	1500	nm	-
Spectral Width (-20dB)	Δλ	-	-	1	nm	-
Side Mode Suppression Ratio	SMSR	30	-	-	dB	-
Average Optical Output Power	Po	+3.5	+5	+7	dBm	
		+5	+7	+8		
Extinction Ratio	Er	9	-	-	dB	-
Rise/Fall Time	Tr/Tf	-	-	260	ps	-
Transmitter Total Jitter	Jp-p	-	-	344	ps	
Transmitter Reflectance	RFL	-	-	-12	dB	
Average Lauched Power of Off Transmitter	Poff	-	-	-39	dBm	-
Differential Input Voltage	V_{IN-DIF}	300	-	1600	mV	-
Tx Disable Input Voltage-Low	V_{IL}	0	-	0.8	V	-
Tx Disable Input Voltage-High	V_{IH}	2.0	-	Vcc	V	-
Output Eye	Compliant with IEEE 802.3ah-2004					
Receiver						
Parameter	**Symbol**	**Min.**	**Typ.**	**Max.**	**Unit**	**Note**
Operate Wavelength	-	1280	1310	1340	nm	-
Sensitivity	Pr	-	-	-30	dBm	1
Saturation	Ps	-6	-	-	dBm	1
LOS assert Level	-	-45	-	-	dBm	-
LOS De-Assert Level	-	-	-	-30	dBm	-
LOS Hysteresis	-	0.5	-	5	dB	-
Receiver Optical Reflectance	-	-	-	-12	dB	-
Data Output Low	Vol	-2	-	-1.58	V	-

EEPROM Information

Alarm and Warning Thresholds (Serial ID A2H)

Parameter(Unit)	C Temp (℃)	Voltage (V)	Bias (mA)	TX Power (dBm)	RX Power (dBm)
High Alarm	100	3.6	90	+8	-6
Low Alarm	-10	3	0	+5	-30
High Warning	95	3.5	70	+7.5	-7
Low Warning	0	3.1	0	+6	-29

Digital Diagnostic Monitor Accuracy

Parameter	Unit	Accuracy	Range	Calibration
Tx Optical Power	dB	±3	Po: -Pomin~Pomax dBm, Recommended operation conditions	External/Internal
Rx Optical Power	dB	±3	Pi: Ps~Pr dBm, Recommended operation conditions	External/Internal
Bias Current	%	±10	Id: 1-100mA, Recommended operating conditions	External/Internal
Power Supply Voltage	%	±3	Recommended operating conditions	External/Internal
Internal Temperature	℃	±3	Recommended operating conditions	External/Internal

Package Diagram

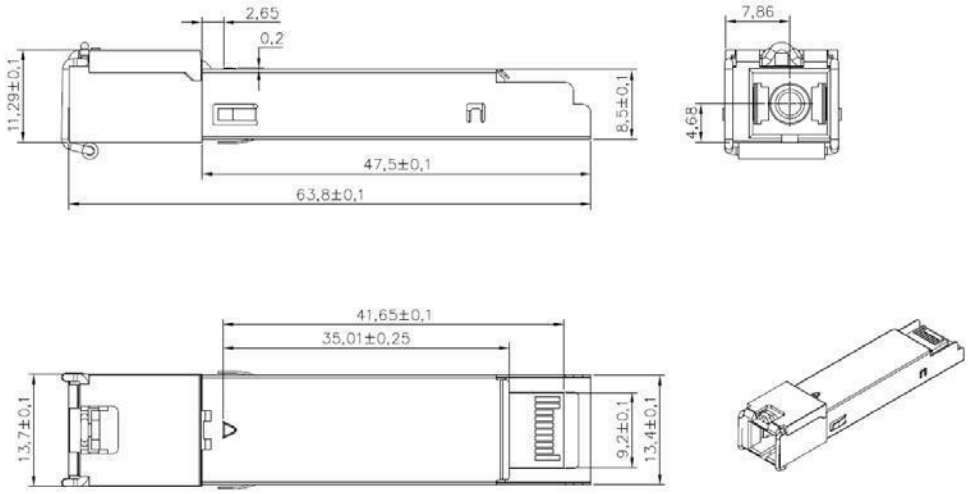

Ordering information:

Ordering P/Ns	Description
NS-GSFP-PX20++	EPON OLT PX20++, 20km, TX 1490nm 1.244Gbps, RX 1310nm 1.244Gbps, minimum optical output power 5db, SFP form-factor, SC/UPC Receptacle connector, 0~70℃
NS-GSFP-PX20+++	EPON OLT PX20+++ , 20km, TX 1490nm 1.244Gbps, RX 1310nm 1.244Gbps, minimum optical output power 7db, SFP form-factor, SC/UPC Receptacle connector, 0~70℃