NS-XFP-W54L80D

10Gb/s XFP BIDI 1550nm/1490nm 80km Optical Transceiver

FEATURES

- XFP MSA package with single LC connector
- Typical bidi 1490/1550nm and 1550nm/1490nm for commission
- APD receiver for high sensitivity
- Hot pluggable
- Support 9.95Gb/s to 11.1Gb/s bit rates
- Digital Diagnostic Monitor Interface
- Very low EMI and excellent ESD protection
- +3.3V single power supply
- Below <1.5w power consumption
- operating temperature range 0°C to 70°C
- No reference clock requirement



APPLICATIONS

- 10GBASE-BX 10.3125Gb/s Ethernet
- 10GBASE-BX 9.953Gb/s Ethernet
- SONET OC-192 &SDH STM I-64.1

STANDARD

- XFP MSA Compliant
- SFF-8472 reversion 9.5 compliant
- IEEE802.3-2005 compliant
- Telcordia GR-468-CORE compliant
- FCC 47 CFR Part 15,Class B compliant
- FDA 21 CFR 1040.10 and 1040.11,class1 com-pliant
- RoHS compliant

PRODUCT DESCRIPTIONS

NS-XFP-W54L80D transceivers are designed for 10G Ethernet 10G BASE-LR/LW per802.3ae and 10G SOI OC-192/SDH STM-64, and it can support data-rate from 9.953Gb/s to 11.1Gb/s.Digital diagnostics are avail-able via I2C interface as specified in the XFP MSA.

The transceiver designs are optimized for high per-formance and cost effective to supply customers the best solutions for data-com and telecom applications.

FUNCTIONAL DIAGRAM

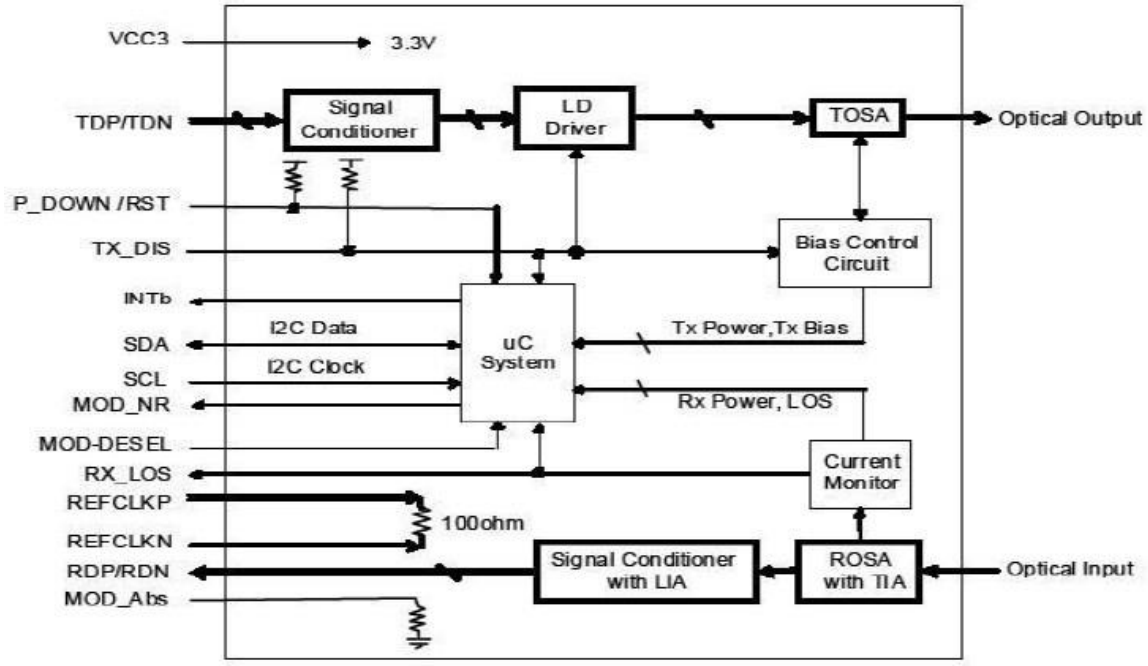

ABSOLUTE MAXIMUM RATINGS

Parameter	Symbol	Min.	Max.	Unit	Note
Supply Voltage	Vcc	-0.5	4.0	V	
Storage Temperature		-40	85	°C	
Relative Humidity			85	%	

Note: Stress in excess of the maximum absolute ratings can cause permanent damage to the module

GERERAL OPERATING CHARACTERISTICS

Parameter		Symbol	Min.	Typ	Max.	Unit	Note
Data Rate	Ethernet			10.3125		Gb/s	
	Fiber Channel			9.953			
Supply Voltage		Vcc	3.14	3.3	3.46	V	
Supply Current		Icc			450	mA	
Operating Case Temp.		Tc	0		70	°C	

ELECTRICAL INPUT/OUTPUT CHARACTERISTICS

- **Transmitter**

Parameter		Symbol	Min.	Typ	Max.	Unit	Note
Diff. input voltage swing			120		820	mVpp	1
Tx Disable input	H	VIH	2.0		Vcc+0.3	V	
	L	VIL	0		0.8		
Tx Fault output	H	VOH	2.0		Vcc+0.3	V	2
	L	VOL	0		0.8		
Input Diff. Impedance		Zin		100		Ω	

- **Receiver**

Parameter		Symbol	Min.	Typ	Max.	Unit	Note
Diff. output voltage swing			340	650	800	mVpp	3
Rx LOS Output	H	VOH	2.0		Vcc+0.3	V	2
	L	VOL	0		0.8		

Note 1) TD+/- are internally AC coupled with 100Ω differential termination inside the module.

Note 2) Tx Fault and Rx LOS are open collector outputs, which should be pulled up with 4.7k to 10kΩ resistors on the host board. Pull up voltage between 2.0V and Vcc+0.3V.

Note 3) RD+/- outputs are internally AC coupled, and should be terminated with 100Ω (differential) at the user SERDES.

OPTICAL CHARACTERISTICS

- **Transmitter (0~70℃@10.3125Gb/s)**

Parameter	Symbol	Min.	Typ	Max.	Unit	Note
Operating Wavelength	T4/R5	1480	1490	1500	nm	1
	T5/R4	1540	1550	1560		
Ave. output power (Enabled)	Po	+1		+6	dBm	2
Extinction Ratio	ER	5			dB	2
RMS spectral width	Δλ			1	nm	
Rise/Fall time (20%~80%)	Tr/Tf			50	ps	3
Optical modulation amplitude	OMA	-4.8			dBm	
Dispersion penalty				3	dB	
Output Optical Eye	IEEE 802.3-2005 Compliant					

- **Receiver (0~70℃@10.3125Gb/s)**

Parameter	Symbol	Min.	Typ	Max.	Unit	Note
Operating Wavelength	T4/R5	1540	1550	1560	nm	1
	T5/R4	1480	1490	1500		
Sensitivity	Psen			-22	dBm	4
Min. overload	Pimax	-7			dBm	
LOS Assert	Pa	-40			dBm	
LOS De-assert	Pd			-22	dBm	
LOS Hysteresis	Pd-Pa	0.5		4	dB	

Note;

1) *1470nm~1610nm transmitter, minimum interval 60nm.*
2) *Measured at 10.3125b/s with PRBS 2^{31} – 1 NRZ test pattern.*
3) *20%~80%*
4) *Under the ER worst case, measured at 10.3125 Gb/s with PRBS 2^{31} - 1 NRZ test pattern for BER < $1x10^{-12}$*

SERIAL INTERFACE FOR ID AND DDM

The XFP modules implement the 2-wire serial communication protocol as defined in the XFP MSA. The serial ID information of the XFP modules and Digital Diagnostic Monitor parameters can be accessed through the I2C interface at address A0h and A2h. The memory is mapped in Table 1. Detailed ID information(A0h) And the DDM specification(A2h) . For more details of the memory map and byte definitions, please refer to the SFF-8472 (Rev 9.3, Aug. 2002), “Digital Diagnostic Monitoring Interface for Optical Transceivers”.

The DDM parameters have been internally calibrated.

Table 1. Digital Diagnostic Memory Map (Specific Data Field Descriptions)

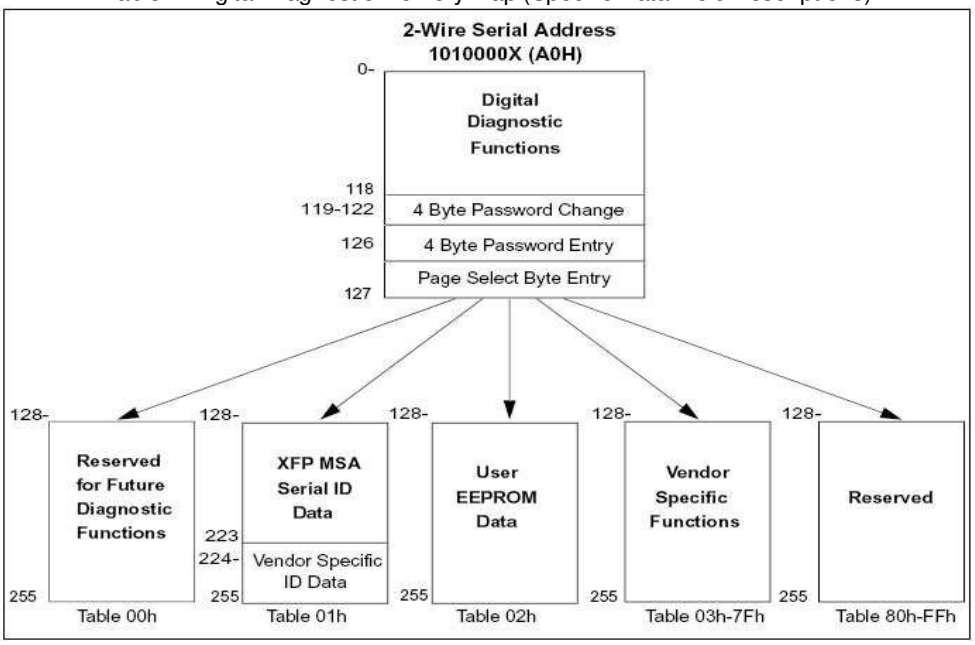

PIN DEFINITIONS AND FUNCTIONS

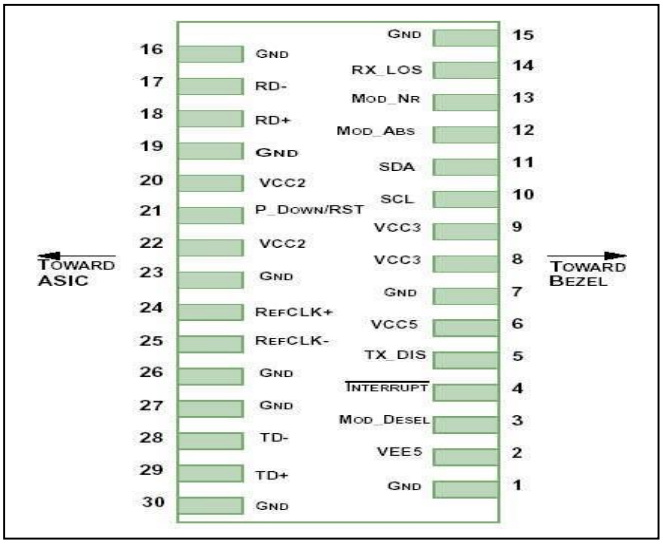

PIN #	Function	Name/Description	Notes
1	GND	Module Ground	1
2	VEE5	Optional -5.2V Power Supply (Not requireed)	
3	MOD_DESEL	Module De-select; When held low allows the module to respond to 2-wire serial interface	
4	INTb	Interrupt; Indicates presence of an important condition which can be read via the 2-wire serial interface	2
5	TX_DIS	Transmitter Disable; Turns off transmitter laser output	
6	VCC5	+5V Power Supply (Not required)	
7	GND	Module Ground	1
8	VCC3	+3.3V Power Supply	
9	VCC3	+3.3V Power Supply	
10	SCL	2-Wire Serial Interface Clock	2
11	SDA	2-Wire Serial Interface Data Line	2
12	MOD_Abs	Indicates Module is not present. Grounded in the Module	2
13	MOD_NR	Module Not Ready; Indicating Module Operational Fault	2
14	RX_LOS	Receiver Loss Of Signal Indicator	2
15	GND	Module Ground	1
16	GND	Module Ground	1
17	RDN	Receiver Inverted Data Output	
18	RDP	Receiver Non-Inverted Data Output	
19	GND	Module Ground	1
20	VCC2	+1.8V Power Supply (Not required).	3
21	P_DOWN/RST	Power down; When high, requires the module to limit power consumption to 1.5W or below. 2-Wire serial interface must be functional in the low power mode.	
21	P_DOWN/RST	Reset; The falling edge initiates a complete reset of the module including the2-wire serial interface, equivalent to a power cycle.	
22	VCC2	+1.8V Power Supply (Not required)	3
23	GND	Module Ground	1
24	REFCLKP	Not used, internally terminated to 50ohm (100ohm diff).	4
25	REFCLKN	Not used, internally terminated to 50ohm (100ohm diff).	4
26	GND	Module Ground	1
27	GND	Module Ground	1
28	TDN	Transmitter Inverted Data Input	
29	TDP	Transmitter Non-Inverted Data Input	
30	GND	Module Ground	1

Note:
1. Module ground pins GND are isolated from the module case and chassis ground within the module.
2. Open collector; Shall be pulled up with 4.7K-10Kohms to a voltage between 3.15V and 3.6V on the host board.
3. The pins are open within module.
4. Reference Clock is not required.

Проектирование сетей,
поставка оборудования, оптимизация и
поддержка IT-инфраструктуры

newnets.ru
newnets@newnets.ru
8 800 777 57 00

TYPICAL INTERFACE CIRCUIT

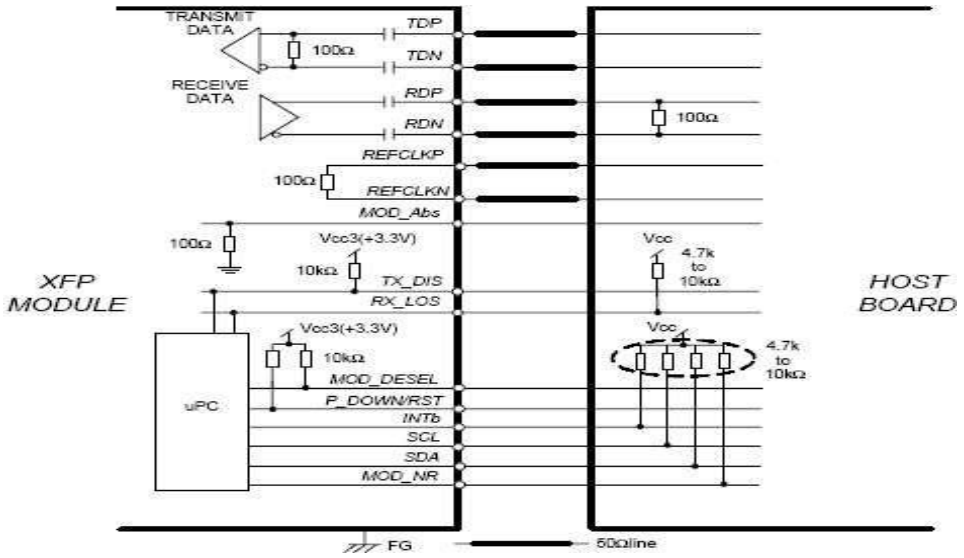

PACKAGE DIMENSIONS

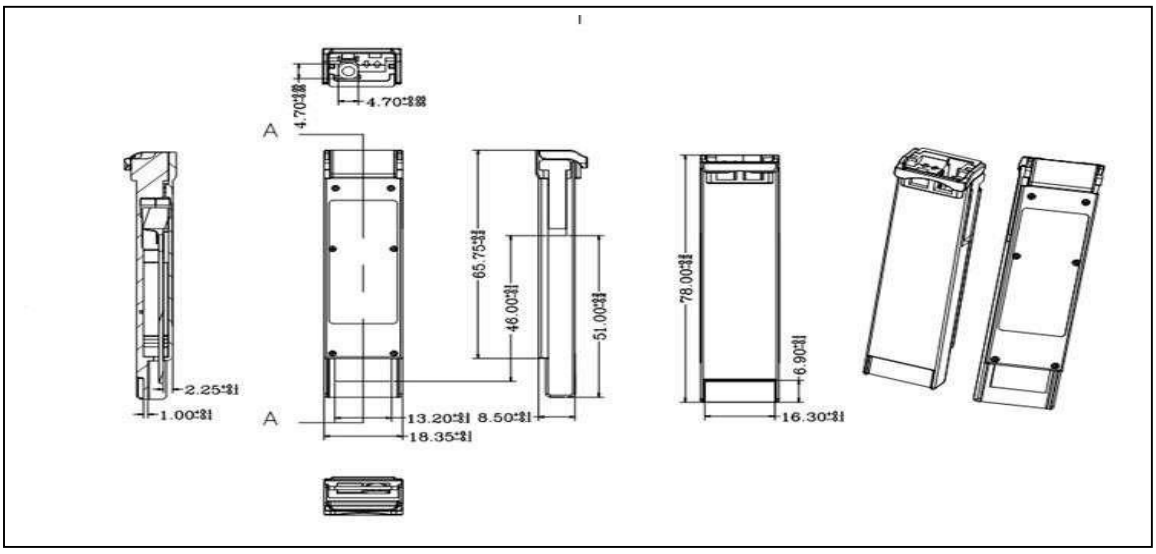

Проектирование сетей,
поставка оборудования, оптимизация и
поддержка IT-инфраструктуры

newnets.ru
newnets@newnets.ru
8 800 777 57 00

ORDERING INFORMATION

Part Number	Description
NS-XFP-W54L80D	XFP BiDi, CWDM TX1490nm/RX1550nm,10.3125Gbps, 80KM,-5~70℃, with DDM
NS-XFP-W54L80D	XFP BiDi, CWDM TX1550nm/RX1490nm,10.3125Gbps, 80KM,-5~70℃, with DDM