Проектирование сетей,
поставка оборудования, оптимизация и
поддержка IT-инфраструктуры
newnets.ru
newnets@newnets.ru
8 800 777 57 00

NS-SFP-1.25G-W35S20D
NS-SFP-1.25G-W53S20D
1.25Gbps BIDI SFP Optical Transceiver 20Km

1. Особенности:

- SFP форм-фактор с SC коннектором
- 1310nm FP лазер и 1550nm PIN фотоприемник
- 1550nm DFB лазер и 1310nm PIN фотоприемник
- До 20Km передача по SMF
- +3.3V источник питания
- Соответствует лазерному стандарту IEC-60825
- Согласован с RoHS
- Согласован с SFF8472
- Рабочие температуры

Станартная	0 to +70	°C
Расширенная	-20 to +85	°C
Промышленная	-40 to +85	°C

2. Применение:

- 1.25Gb/s 1000Base-LX Ethernet
- 1.06 Gb/s Fibre Channel

3. Абсолютные максимальные показатели:

Parameter	Symbol	Minimum	Maximum	Units
Storage Temperature	Tst	-40	+85	°C
Supply Voltage	Vcc	0	+3.6	V
Operating Relative Humidity	RH	5	95	%

Проектирование сетей,
поставка оборудования, оптимизация и
поддержка IT-инфраструктуры
newnets.ru
newnets@newnets.ru
8 800 777 57 00

4. Условия среды:

Parameter	Symbol	Min	Typical	Max	Units
Supply Voltage	Vcc	3.15	3.3	3.45	V
Operating Case Temperature	TC	0		+70	℃
		-20		+85	
		-40		+85	
Power Dissipation				1	W
Data			1.25		Gbps

5. Оптические характеристики:

Parameter		Symbol	Min.	Typ.	Max.	Units
Transmitter Section						
Center Wavelength	Tx 1310	λo	1260	1310	1360	nm
	Tx 1550		1540	1550	1560	
Spectral Width(RMS)	Tx 1310	Δλ	-	-	4	nm
	Tx 1550				1	
Average Output Power	Tx 1310	Po	-9	-	-3	dBm
	Tx 1550		-9		-3	
Extinction Ratio		Er	8	-		dB
Rise/Fall Time(20%~80%)		Tr/Tf			300	ps
Total jitter		Tj			0.43	UI
Optical Eye Diagram		IEEE 802.3z and ANSI Fibre Channel Compatible				
Receiver Section						
Center Wavelength	Rx 1550	λo	1500	1550	1600	nm
	Rx 1310		1260	1310	1360	

Receiver Sensitivity	Rsen			-22	dBm
Receiver Overload	Rov	-3			dBm
Return Loss		12			dB
LOS Assert	LOS_A	-36			dBm
LOS Dessert	LOS_D			-23	dBm
LOS Hysteresis		0.5		5	

6.Электрические характеристики：

Parameter		Symbol	Min.	Typ.	Max.	unit
Transmitter Section						
Input Differential Impendence		Zin	90	100	110	Ohm
Data Input Swing Differential		Vin	500		2400	mV
TX Disable	Disable		2.0		Vcc	V
	Enable		0		0.8	V
TX Fault	Assert		2.0		Vcc	V
	Deassert		0		0.8	V
Receiver Section						
Output differential impendence		Zout		100		Ohm
Data Input Swing Differential		Vout	370		2000	mV
Rx_LOS	Assert		2.0		Vcc	V
	Deassert		0		0.8	V

7. EEPROM INFORMATION（A0）：

Addr	Field Size (Bytes)	Name of Field	HEX	Description
0	1	Identifier	03	SFP
1	1	Ext. Identifier	04	MOD4
2	1	Connector	07	LC
3-10	8	Transceiver	00 00 00 02 12 00 0D 01	Transmitter Code
11	1	Encoding	01	8B10B
12	1	BR, nominal	0D	1250M bps
13	1	Reserved	00	
14	1	Length (9um)-km	14	20km
15	1	Length (9um)	64/C8/FF	
16	1	Length (50um)	00	

17	1	Length (62.5um)	00	
18	1	Length (copper)	00	
19	1	Reserved	00	
20-35	16	Vendor name	57 49 4E 54 4F 50 20 20 20 20 20 20 20 20 20 20	
36	1	Reserved	00	
37-39	3	Vendor OUI	00 00 00	
40-55	16	Vendor PN	xx xx xx xx xx xx xx xx xx xx xx xx xx xx xx xx	ASC II
56-59	4	Vendor rev	31 2E 30 20	V1.0
60-61	2	Wavelength	05 1E/05 D2	1310nm/1550nm
62	1	Reserved	00	
63	1	CC BASE	XX	Check sum of byte 0~62
64-65	2	Options	00 1A	LOS, TX_DISABLE, TX_FAULT
66	1	BR, max	32	50%
67	1	BR, min	32	50%
68-83	16	Vendor SN	00 00 00 00 00 00 00 00 00 00 00 00 00 00 00 00	Unspecified
84-91	8	Vendor date code	XX XX XX 20	Year, Month, Day
92-94	3	Reserved	00	
95	1	CC_EXT	XX	Check sum of byte 64~94
96-255	160	Vendor specific		

8. Pin Описание:

Pins	Name	Discription	NOTE
1	VeeT	Transmitter Ground	
2	Tx Fault	Transmitter Fault Indication	1
3	Tx Disable	Transmitter Disable	2
4	MOD DEF2	Module Definition 2	3
5	MOD DEF1	Module Definition 1	3
6	MOD DEF0	Module Definition 0	3
7	Rate Select	Not Connected	
8	LOS	Loss of Signal	4
9	VeeR	Receiver Ground	
10	VeeR	Receiver Ground	
11	VeeR	Receiver Ground	
12	RD-	Inv. Received Data Output	5
13	RD+	IReceived Data Output	5
14	VeeR	Receiver Ground	

Проектирование сетей,
поставка оборудования, оптимизация и
поддержка IT-инфраструктуры
newnets.ru
newnets@newnets.ru
8 800 777 57 00

15	VccR	Receiver Power	
16	VccT	Transmitter Power	
17	VeeT	Transmitter Ground	
18	TD+	Transmit Data Input	6
19	TD-	Inv. Transmit Data Input	6
20	VeeT	Transmitter Ground	

Notes:

1. TX Fault is an open collector output, which should be pulled up with a 4.7k~10kΩ resistor on the host board to a voltage between 2.0V and Vcc+0.3V. Logic 0 indicates normal operation; logic 1 indicates a laser fault of some kind. In the low state, the output will be pulled to less than 0.8V.
2. TX Disable is an input that is used to shut down the transmitter optical output. It is pulled up within the module with a 4.7k~10kΩ resistor. Its states are:
   Low (0~0.8V): Transmitter on
   (>0.8V, <2.0V): Undefined
   High (2.0~3.3V): Transmitter Disabled
   Open: Transmitter Disabled
3. MOD-DEF 0,1,2 are the module definition pins. They should be pulled up with a 4.7k~10kΩ resistor on the host board. The pull-up voltage shall be VccT or VccR.
   MOD-DEF 0 is grounded by the module to indicate that the module is present
   MOD-DEF 1 is the clock line of two wire serial interface for serial ID
   MOD-DEF 2 is the data line of two wire serial interface for serial ID
4. LOS is an open collector output, which should be pulled up with a 4.7k~10kΩ resistor on the host board to a voltage between 2.0V and Vcc+0.3V. Logic 0 indicates normal operation; logic 1 indicates loss of signal. In the low state, the output will be pulled to less than 0.8V.

5. These are the differential receiver output. They are internally AC-coupled 100Ω differential lines which should be terminated with 100Ω (differential) at the user SERDES.
6. These are the differential transmitter inputs. They are AC-coupled, differential lines with 100Ω differential termination inside the module.

Проектирование сетей,
поставка оборудования, оптимизация и
поддержка IT-инфраструктуры
newnets.ru
newnets@newnets.ru
8 800 777 57 00

9. Рекомендуемая схема применения:

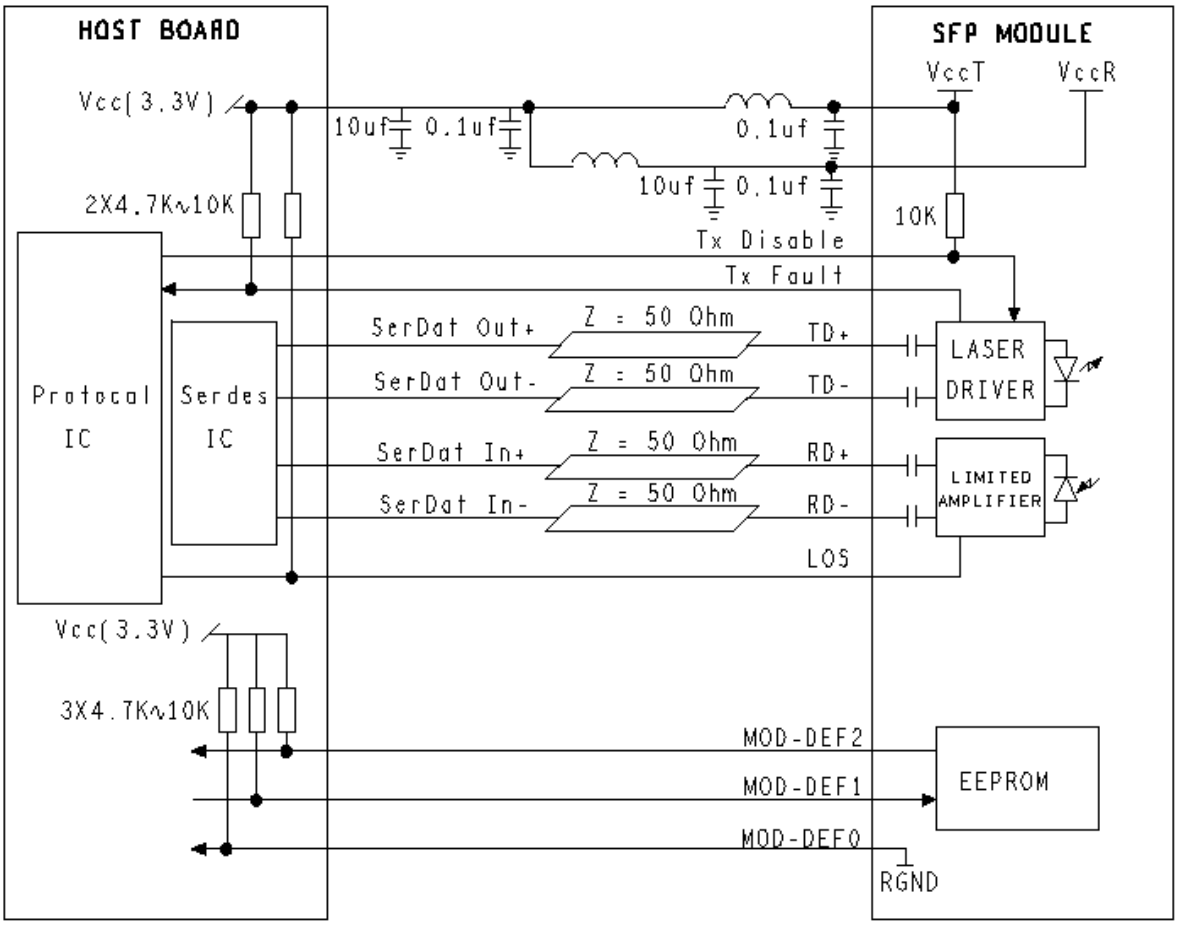

10. Чертеж (mm):

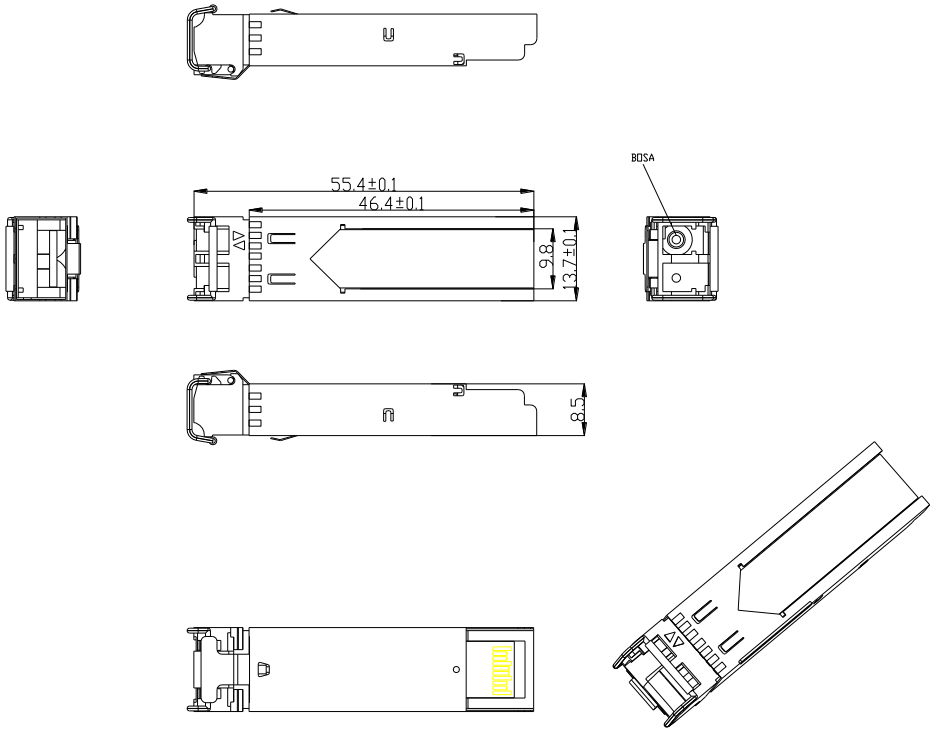

11. Информация для заказа

Part Number	Description
NS-SFP-1.25G-W35S20D	SFP, 1.25G, Tx/Rx 1310/1550nm, SC, DDM, Extended
NS-SFP-1.25G-W53S20D	SFP, 1.25G, Tx/Rx 1550/1310nm, SC, DDM, Extended