Проектирование сетей,
поставка оборудования, оптимизация и
поддержка IT-инфраструктуры
newnets.ru
newnets@newnets.ru
8 800 777 57 00

NS-SFP-1.25G-ZX120D

1.25Gbps SFP 1550nm 120km

Особенности

- Dual data-rate of 1.25Gbps/1.063Gbps operation
- 1550nm DFB laser and APD photodetector for 120km transmission
- Compliant with SFP MSA and SFF-8472 with duplex LC receptacle
- Digital Diagnostic Monitoring:
  Internal Calibration or External Calibration
- Compatible with SONET OC-24-LR-1
- Compatible with RoHS
- +3.3V single power supply
- Operating case temperature:
  Standard : 0 to +70°C
  Extended : -20 to +85°C

Applications

- Gigabit Ethernet
- Fiber Channel
- Switch to Switch interface
- Switched backplane applications
- Router/Server interface
- Other optical transmission systems

Description

The SFP transceivers are high performance, cost effective modules supporting dual data-rate of 1.25Gbps/1.0625Gbps and 120km transmission distance with SMF.

The transceiver consists of three sections: a DFB laser transmitter, a APD photodiode integrated with a trans-impedance preamplifier (TIA) and MCU control unit. All modules satisfy class I laser safety requirements.

The transceivers are compatible with SFP Multi-Source Agreement (MSA) and SFF-8472. For further information, please refer to SFP MSA.

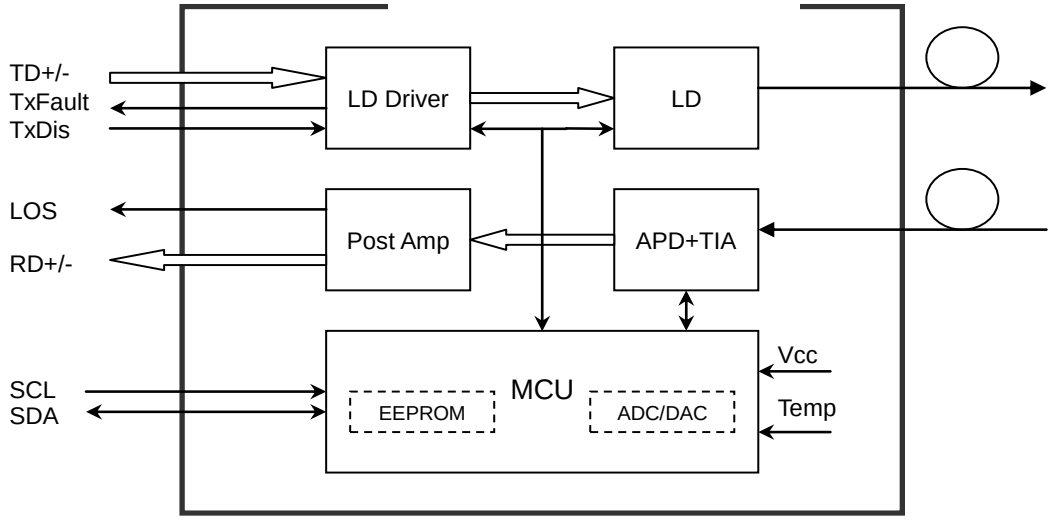

Absolute Maximum Ratings

Table 1 - Absolute Maximum Ratings

Parameter	Symbol	Min	Max	Unit
Supply Voltage	Vcc	-0.5	4.5	V
Storage Temperature	Ts	-40	+85	°C
Operating Humidity	-	5	85	%

Recommended Operating Conditions

Table 2 - Recommended Operating Conditions

Parameter		Symbol	Min	Typical	Max	Unit
Operating Case Temperature	Standard	Tc	0		+70	°C
	Extended		-20		+85	°C
Power Supply Voltage		Vcc	3.13	3.3	3.47	V
Power Supply Current		Icc			300	mA
Data Rate	Gigabit Ethernet			1.25		Gbps
	Fiber Channel			1.063		

Optical and Electrical Characteristics

PP-5524-12xD: (DFB and APD, 1550nm, 120km Reach)

Table 3 - Optical and Electrical Characteristics

Parameter	Symbol	Min	Typical	Max	Unit	Notes
Transmitter						
Centre Wavelength	λc	1520	1550	1580	nm	
Spectral Width (-20dB)	Δλ			1	nm	

Average Output Power		Pout			5	dBm	1
Extinction Ratio		ER	9			dB	
Optical Rise/Fall Time (20%~80%)		tr/tf			0.26	ns	
Data Input Swing Differential		V_{IN}	400		1800	mV	2
Input Differential Impedance		Z_{IN}	90	100	110	Ω	
TX Disable	Disable		2.0		Vcc	V	
	Enable		0		0.8	V	
TX Fault	Fault		2.0		Vcc	V	
	Normal		0		0.8	V	
Receiver							
Centre Wavelength		λc	1260		1580	nm	
Receiver Sensitivity					-31	dBm	3
Receiver Overload			-9			dBm	3
LOS De-Assert		LOS_D			-32	dBm	
LOS Assert		LOS_A	-35			dBm	
LOS Hysteresis			0.5		4.5	dB	
Data Output Swing Differential		Vout	370		1800	mV	4
LOS		High	2.0		Vcc	V	
		Low			0.8	V	

Notes:
1. The optical power is launched into SMF.
2. PECL input, internally AC-coupled and terminated.
3. Measured with a PRBS 2^7-1 test pattern @1250Mbps, BER ≤1×10^{-12}.
4. Internally AC-coupled.

Timing and Electrical

Table 4 - Timing and Electrical

Parameter	Symbol	Min	Typical	Max	Unit
Tx Disable Negate Time	t_on			1	ms
Tx Disable Assert Time	t_off			10	μs
Time To Initialize, including Reset of Tx Fault	t_init			300	ms
Tx Fault Assert Time	t_fault			100	μs
Tx Disable To Reset	t_reset	10			μs
LOS Assert Time	t_loss_on			100	μs

LOS De-assert Time	t_loss_off			100	μs
Serial ID Clock Rate	f_serial_clock			400	KHz
MOD_DEF (0:2)-High	V_H	2		Vcc	V
MOD_DEF (0:2)-Low	V_L			0.8	V

Diagnostics

Table 5 – Diagnostics Specification

Parameter	Range	Unit	Accuracy	Calibration
Temperature	0 to +70 -20 to +85	°C	±3°C	Internal / External
Voltage	3.0 to 3.6	V	±3%	Internal / External
Bias Current	0 to 100	mA	±10%	Internal / External
TX Power	0 to +5	dBm	±3dB	Internal / External
RX Power	-30 to -9	dBm	±3dB	Internal / External

Digital Diagnostic Memory Map

The transceivers provide serial ID memory contents and diagnostic information about the present operating conditions by the 2-wire serial interface (SCL, SDA).

The diagnostic information with internal calibration or external calibration all are implemented, including received power monitoring, transmitted power monitoring, bias current monitoring, supply voltage monitoring and temperature monitoring.

The digital diagnostic memory map specific data field defines as following.

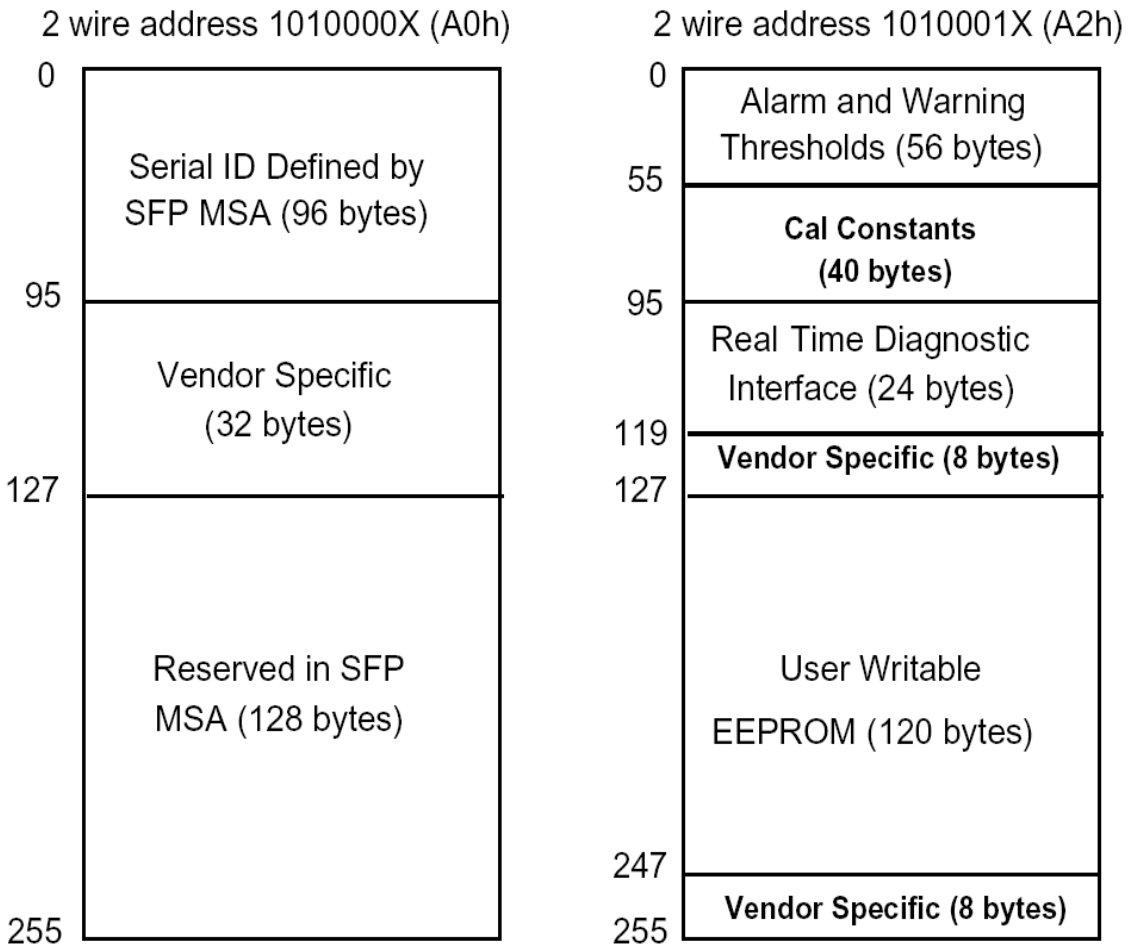

Проектирование сетей,
поставка оборудования, оптимизация и
поддержка IT-инфраструктуры
newnets.ru
newnets@newnets.ru
8 800 777 57 00

Pin Definitions

Pin Diagram

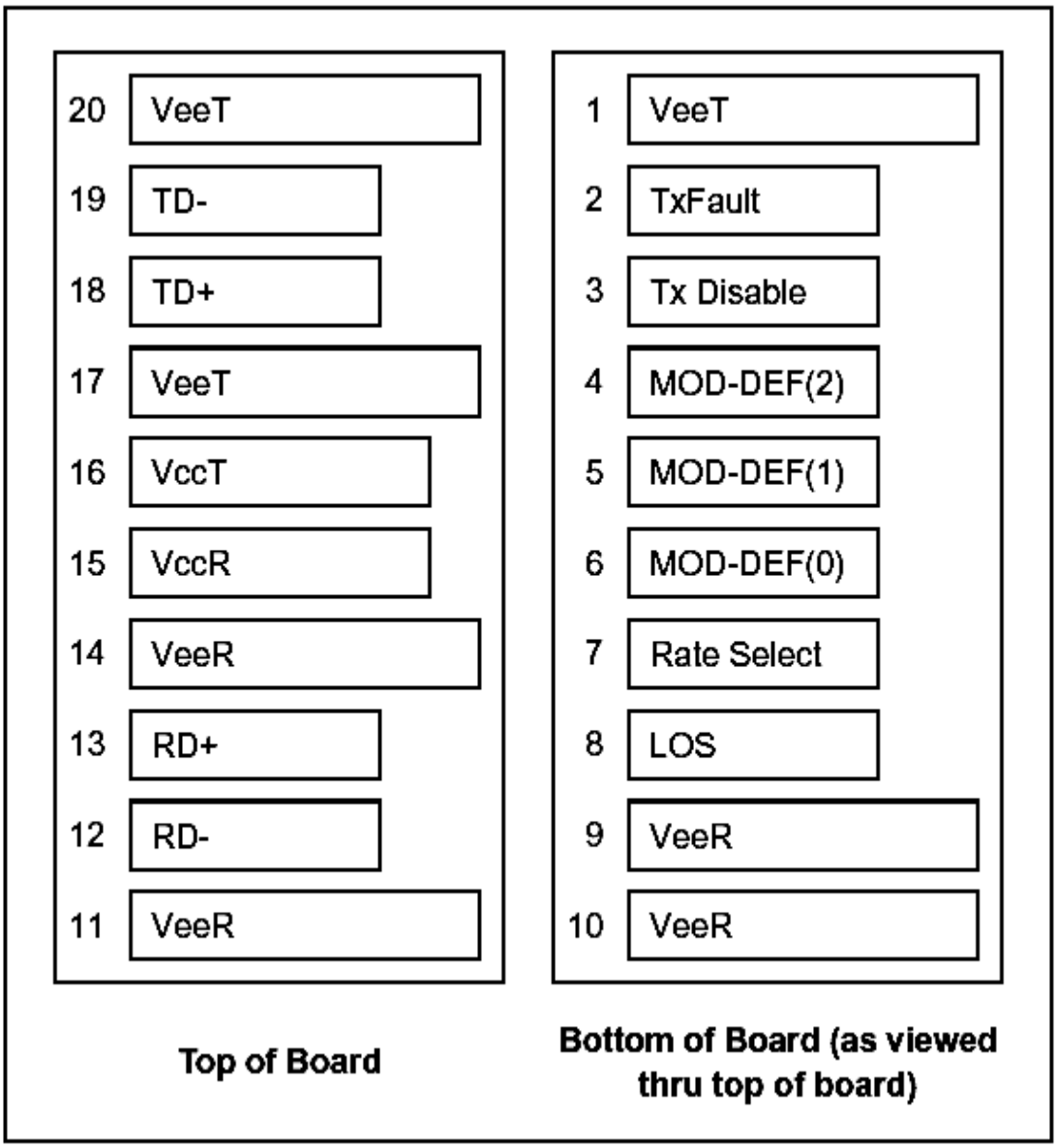

Pin Descriptions

Pin	Signal Name	Description	Plug Seq.	Notes
1	V_{EET}	Transmitter Ground	1	
2	TX FAULT	Transmitter Fault Indication	3	Note 1
3	TX DISABLE	Transmitter Disable	3	Note 2
4	MOD_DEF(2)	SDA Serial Data Signal	3	Note 3
5	MOD_DEF(1)	SCL Serial Clock Signal	3	Note 3
6	MOD_DEF(0)	TTL Low	3	Note 3
7	Rate Select	Not Connected	3	
8	LOS	Loss of Signal	3	Note 4
9	V_{EER}	Receiver ground	1	
10	V_{EER}	Receiver ground	1	
11	V_{EER}	Receiver ground	1	
12	RD-	Inv. Received Data Out	3	Note 5
13	RD+	Received Data Out	3	Note 5
14	V_{EER}	Receiver ground	1	
15	V_{CCR}	Receiver Power Supply	2	
16	V_{CCT}	Transmitter Power Supply	2	
17	V_{EET}	Transmitter Ground	1	
18	TD+	Transmit Data In	3	Note 6
19	TD-	Inv. Transmit Data In	3	Note 6
20	V_{EET}	Transmitter Ground	1	

Notes:

Plug Seq.: Pin engagement sequence during hot plugging.

1) TX Fault is an open collector output, which should be pulled up with a 4.7k~10kΩ resistor on the host board to a voltage between 2.0V and Vcc+0.3V. Logic 0 indicates normal operation; Logic 1 indicates a laser fault of some kind. In the low state, the output will be pulled to less than 0.8V.
2) TX Disable is an input that is used to shut down the transmitter optical output. It is pulled up within the module with a 4.7k~10kΩ resistor. Its states are:
   Low (0 to 0.8V): Transmitter on
   (>0.8V, < 2.0V): Undefined
   High (2.0 to 3.465V): Transmitter Disabled
   Open: Transmitter Disabled
3) Mod-Def 0,1,2. These are the module definition pins. They should be pulled up with a 4.7k~10kΩ resistor on the host board. The pull-up voltage shall be VccT or VccR.
   Mod-Def 0 is grounded by the module to indicate that the module is present
   Mod-Def 1 is the clock line of two wire serial interface for serial ID
   Mod-Def 2 is the data line of two wire serial interface for serial ID
4) LOS is an open collector output, which should be pulled up with a 4.7k~10kΩ resistor. Pull up voltage between 2.0V and Vcc+0.3V. Logic 1 indicates loss of signal; Logic 0 indicates normal operation. In the low state, the output will be pulled to less than 0.8V.
5) RD-/+: These are the differential receiver outputs. They are internally AC-coupled 100 differential lines which should be terminated with 100Ω (differential) at the user SERDES.
6) TD-/+: These are the differential transmitter inputs. They are internally AC-coupled, differential lines with 100Ω differential termination inside the module.

Проектирование сетей,
поставка оборудования, оптимизация и
поддержка IT-инфраструктуры
newnets.ru
newnets@newnets.ru
8 800 777 57 00

Recommended Interface Circuit

