GO-SFP+W23L20D и GO-SFP+W32L20D

20KM SFP+ Optical Transceiver BiDi Одноволоконные двунаправленные модули

Особенности

Согласован с SFF-8431 и IEE802.3ae
Различные скорости передачи данных ≤4.25Gbps или 9.95Gbps/10.3Gbps
Длины волн выбираются в соответствии со стандартом ITU-T 1310 и 1270 нм
Малая рассеиваемая мощность 2W Maximum
Рабочие температуры от -5ºC до 70ºC
Источник питания +3.3V
DDM
Согласовано с RoHS

Применение

10GBASE Ethernet

Описание

SFP+ трансивер состоит из 2х частей: Передатчик состоит из охлаждаемого лазера, а приемник содержит APD фотодиод интегрированный в TIA.
Все модули удовлетворяют требованиям безопасности лазера класса I.

Абсолютные максимальные показатели

Parameter	Symbol	Min	Max	Unit
Supply Voltage	Vcc	-0.5	3.8	V
Storage Temperature	Tst	-40	85	ºC
Relative Humidity	Rh	0	85	%

Условия эксплуатации

Parameter	Symbol	Min	Typical	Max	Unit
Supply Voltage	Vcc	3.13	3.3	3.47	V
Supply current	Icc	420		610	mA
Operating Case temperature	Tca	-5	-	70	ºC
Module Power Dissipation	Pm	-	1.4	2	W

Notes:
[1] Supply current is shared between VCCTX and VCCRX.
[2] In-rush is defined as current level above steady state current requirements.

Характеристики передатчика (оптические)

Parameter	Symbol	Min	Typical	Max	Unit
Center Wavelength	λ_c	1260/1300	1270/1310	1280/1330	nm
Center wavelength stability	$\Delta\lambda_D$	−6.5	λ_c	6.5	nm
Optical Average Power	Po	-8	-	0	dBm
Optical OMA Power	Pom		-2.1		dBm
Side Mode Suppression Ratio	SMSR	30	-	-	dB
Optical Transmit Power (disabled)	PTX_DISABLE	-	-	-30	dBm
Extinction Ratio	ER		8.2		dB
$RIN_{21}OMA$ [1]			-128		dB/Hz
Optical Return Loss Tolerance			21		dB

Notes:
[1] RIN measurement is made with a return loss at 21 dB.

Характеристики передатчика (электрические)

Parameter	Symbol	Min	Typical	Max	Unit
Data Rate	Mra	-	10.3	11.3	Gbps
Input differential impedance	Rim	-	100	-	Ω
Differential data Input	VtxDIFF	120	-	850	mV
Transmit Disable Voltage	VD	2.0	-	Vcc3+0.3	V
Transmit Enable Voltage	Ven	0	-	+0.8	V
Transmit Disable Assert Time	Vn	-	-	100	us

Характеристики приемника (оптические)

Parameter	Symbol	Min	Typical	Max	Unit
Input Operating Wavelength	λ	1260/1300	1270/1310	1280/1330	nm
Average receive power	-	-	-1.0		dBm
Receiver sensitivity	-	-	-14		dBm
Maximum Input Power	RX-overload	-	-	-4	dBm
Reflectance	Rrx	-	-	-15	dB
Loss of Signal Asserted		-	-35		dBm
LOS De-Asserted	-	-	-30		dBm
LOS Hysteresis		-	0.5		dB

Характеристики приемника (электрические)

Parameter	Symbol	Min	Typical	Max	Unit
Data Rate	Mra	-	10.3	11.3	Gbps
Differential Output Swing	Vout P-P	350	-	850	mV
Rise/Fall Time	Tr / Tf	24	-	-	ps
Loss of Signal – Asserted	VOH	2	-	Vcc3+0.3-	V
Loss of Signal – Negated	VOL	0	-	+0.4	V

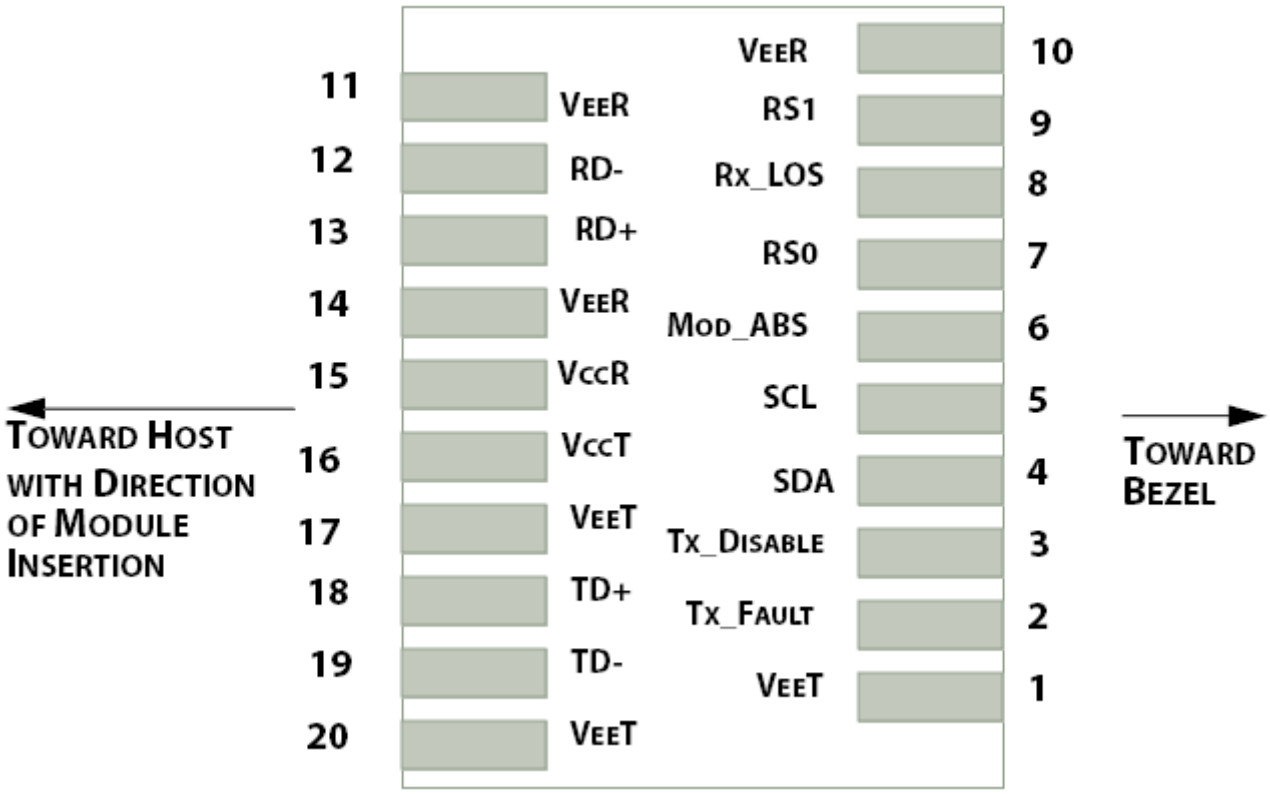

Electrical Pin-out Details

Pin Описание

Pin	Symbol	Name/Description
1	VEET [1]	Transmitter Ground
2	Tx_FAULT [2]	Transmitter Fault
3	Tx_DIS [3]	Transmitter Disable. Laser output disabled on high or open
4	SDA [2]	2-wire Serial Interface Data Line
5	SCL [2]	2-wire Serial Interface Clock Line
6	MOD_ABS [4]	Module Absent. Grounded within the module
7	RS0 [5]	RS0 for Rate Select: Open or Low = Module supports ≤4.25Gbps High = Module supports 9.95 Gb/s to 10.3125 Gb/s
8	RX_LOS [2]	Loss of Signal indication. Logic 0 indicates normal operation
9	RS1 [5]	No connection required
10	VEER [1]	Receiver Ground

11	VEER [1]	Receiver Ground
12	RD-	Receiver Inverted DATA out. AC Coupled
13	RD+	Receiver DATA out. AC Coupled
14	VEER [1]	Receiver Ground
15	VCCR	Receiver Power Supply
16	VCCT	Transmitter Power Supply
17	VEET [1]	Transmitter Ground
18	TD+	Transmitter DATA in. AC Coupled
19	TD-	Transmitter Inverted DATA in. AC Coupled
20	VEET [1]	Transmitter Ground

Notes:
[1] Module circuit ground is isolated from module chassis ground within the module.
[2].should be pulled up with 4.7k – 10k ohms on host board to a voltage between 3.15Vand 3.6V.
[3]Tx_Disable is an input contact with a 4.7 kΩ to 10 kΩ pullup to VccT inside the module.
[4]Mod_ABS is connected to VeeT or VeeR in the SFP+ module. The host may pull this contact up to Vcc_Host with a resistor in the range 4.7 kΩ to10 kΩ.Mod_ABS is asserted “High” when the SFP+ module is physically absenthost slot.
[5] RS0 and RS1 are module inputs and are pulled low to VeeT with > 30 kΩ resistors in the module.

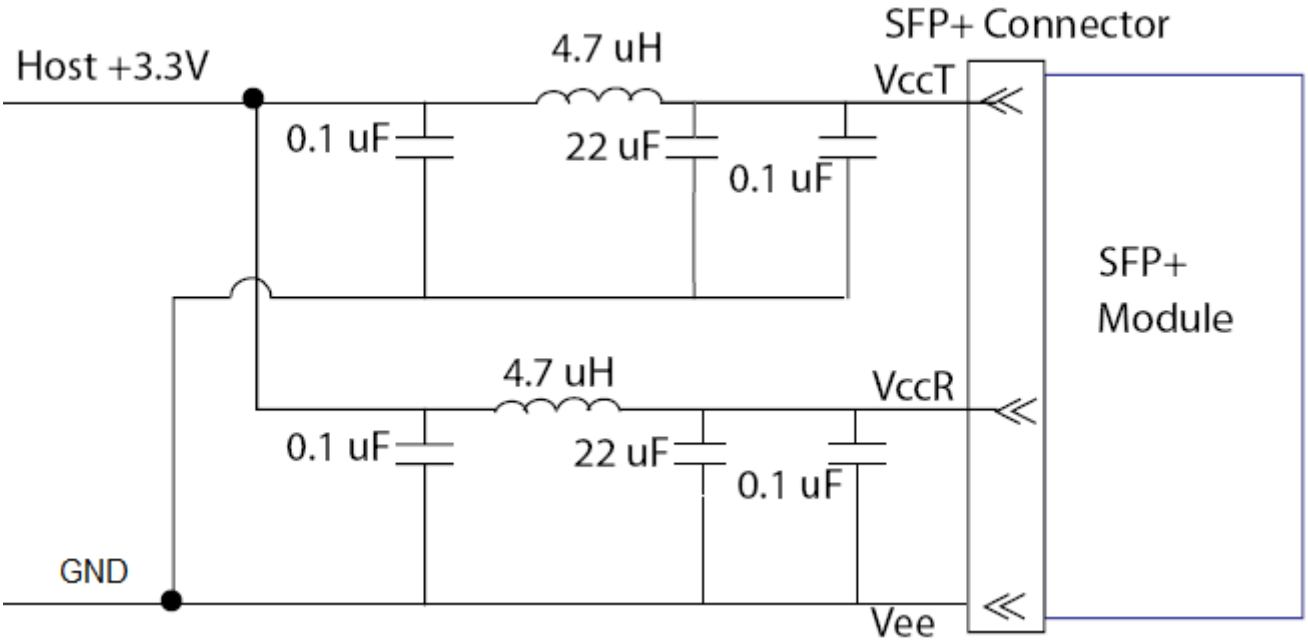

Host Board Power Supply Filters Circuit
0

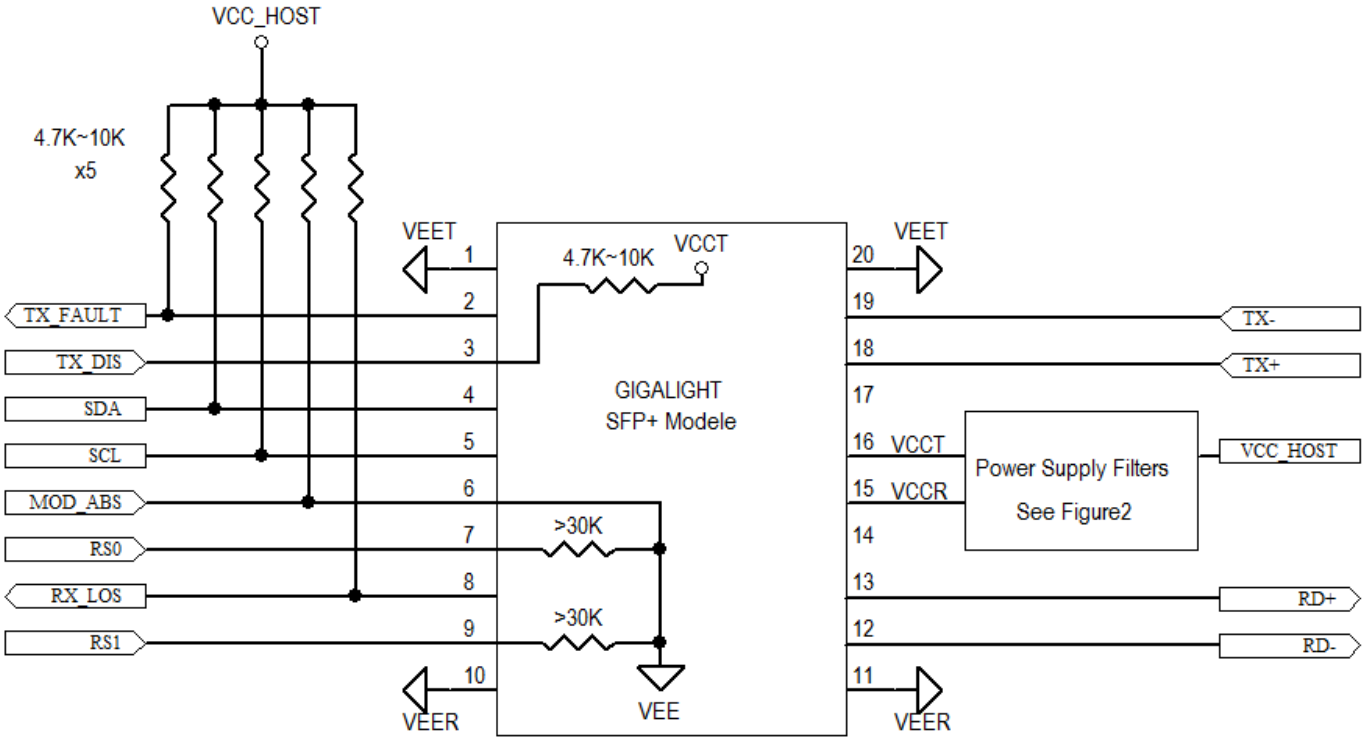

Host-Module Interface

Механические характеристики

