**Оптический трансивер NS-SFP 1,25G DWDM 1.25Gb/s 180km DWDM SFP Transceiver**

## Features:

- Hot-Pluggable
- Duplex LC connector
- Up to 1.25Gb/s data rate
- 100GHz ITU Grid, C Band
- DWDM COOLED DFB transmitter, APD photo-detector
- SMF links up to 180km
- 2-wire interface for management specifications compliant with SFF 8472 digital diagnostic monitoring interface
- Power Supply :+3.3V
- Power consumption<1.5W
- Temperature Range: 0~ 70° C
- RoHS compliant

## Applications:

- 1G Fibre channel
- DWDM Network

## Description:

NS-SFP 1,25G is a very compact 1.25Gb/s optical transceiver module for serial optical communication applications at 1.25Gb/s. The NS-SFP 1,25G converP a 1.25Gb/s serial electrical data stream to 1.25Gb/s optical output signal and a 1.25Gb/s optical input signal to 1.25Gb/s serial electrical data streams. The high speed 1.25Gb/s electrical interface is fully compliant with SFI specification.

The high performance DWDM COOLED DFB transmitter and high sensitivity APD receiver provide superior performance for Ethernet applications at up to 200km links.

The SFP Module complianP with SFF-8431, SFF-8432 Digital diagnostics functions are available via a 2-wire serial interface, as specified in SFF-8472.

The fully SFP compliant form factor provides hot pluggability, easy optical port upgrades and low EMI emission.

- ## Absolute Maximum Ratings

| Parameter | Symbol | Min. | Typical | Max. | Unit |
|---|---|---|---|---|---|
| Storage Temperature | P | -40 | | +85 | °C |
| Case Operating Temperature | $T_A$ | 0 | | 70 | °C |
| Maximum Supply Voltage | Vcc | -0.5 | | 4 | V |
| Relative Humidity | RH | 0 | | 85 | % |

## Electrical Characteristics ($T_{OP}$ = 0 to 70 °C, VCC = 3.135 to 3.465 VolP)

| Parameter | Symbol | Min. | Typical | Max. | Unit | Note |
|---|---|---|---|---|---|---|
| Supply Voltage | Vcc | 3.135 | | 3.465 | V | |
| Supply Current | Icc | | | 450 | mA | |
| Power Consumption | P | | | 1.5 | W | |
| **Transmitter Section:** | | | | | | |
| Input differential impedance | $R_{in}$ | | 100 | | Ω | 1 |
| Tx Input Single Ended DC Voltage Tolerance (Ref VeeT) | V | -0.3 | | 4 | V | |
| Differential input voltage swing | Vin,pp | 180 | | 700 | mV | 2 |
| Transmit Disable Voltage | $V_D$ | 2 | | Vcc | V | 3 |
| Transmit Enable Voltage | $V_{EN}$ | Vee | | Vee+0.8 | V | |
| **Receiver Section:** | | | | | | |
| Single Ended Output Voltage Tolerance | V | -0.3 | | 4 | V | |
| Rx Output Diff Voltage | Vo | 300 | | 850 | mV | |
| Rx Output Rise and Fall Time | Tr/Tf | 30 | | | ps | 4 |
| LOS Fault | $V_{LOS\ fault}$ | 2 | | $Vcc_{HOST}$ | V | 5 |
| LOS Normal | $V_{LOS\ norm}$ | Vee | | Vee+0.8 | V | 5 |

Note:

1. Connected directly to TX data input pins. AC coupling from pins into laser driver IC.
2. Per SFF-8431 Rev 3.0
3. Into 100 ohms differential termination.4 20%  80%
4. LOS is an open collector output. Should be pulled up with 4.7k – 10kΩ on the host board. Normaloperation is logic 0; loss of signal is logic 1. Maximum pull-up voltage is 5.5V.

## Optical Parameters(TOP = 0 to 70°C, VCC = 3.135 to 3.465 VolP)

| Parameter | Symbol | Min. | Typical | Max. | Unit | Note |
|---|---|---|---|---|---|---|
| **Transmitter Section:** | | | | | | |
| Optical Wavelength-End Of Life | λ | X-100 | X | X+100 | pm | |
| Optical Wavelength-Beginning Of Life | λ | X-25 | X | X+25 | pm | |
| Average Optical Power | Pavg | +3 | | +7 | dBm | 1 |
| Laser Off Power | Poff | | | -30 | dBm | |
| Extinction Ratio | ER | 8.2 | | | dB | |
| Transmitter Dispersion Penalty | TDP | | | 3.0 | dB | |
| Relative Intensity Noise | Rin | | | -128 | dB/Hz | 2 |
| Optical Return Loss Tolerance | | 20 | | | dB | |
| **Receiver Section:** | | | | | | |
| Center Wavelength | λr | 1480 | | 1580 | nm | |
| Receiver Sensitivity (OMA) | Sen | | | -37 | dBm | 2 |
| Los Assert | $LOS_A$ | -46 | | - | dBm | |
| Los Dessert | $LOS_D$ | | | -38 | dBm | |
| Los Hysteresis | $LOS_H$ | 0.5 | | | dB | |
| Overload | Sat | -8 | | | dBm | 3 |
| Receiver Reflectance | Rrx | | | -12 | dB | |

Note:

1. Average power figures are informative only Fibre channel
2. 12dB reflection.
3. Receiver overload specified in OMA and under the worst comprehensive stressed condition.

## Timing Characteristics

| Parameter | Symbol | Min. | Typical | Max. | Unit |
|---|---|---|---|---|---|
| TX_Disable Assert Time | t_off | | | 10 | us |
| TX_Disable Negate Time | t_on | | | 1 | ms |
| Time to Initialize Include Reset of TX_FAULT | t_int | | | 300 | ms |
| TX_FAULT from Fault to Assertion | t_fault | | | 100 | us |
| TX_Disable Time to Start Reset | t_reset | 10 | | | us |
| Receiver Loss of Signal Assert Time | $T_A$,RX_LOS | | | 100 | us |
| Receiver Loss of Signal Deassert Time | $T_d$,RX_LOS | | | 100 | us |
| Rate-Select Chage Time | t_ratesel | | | 10 | us |
| Serial ID Clock Time | t_serial-clock | | | 100 | kHz |

## Pin Assignment

Diagram of Host Board Connector Block Pin Numbers and Name

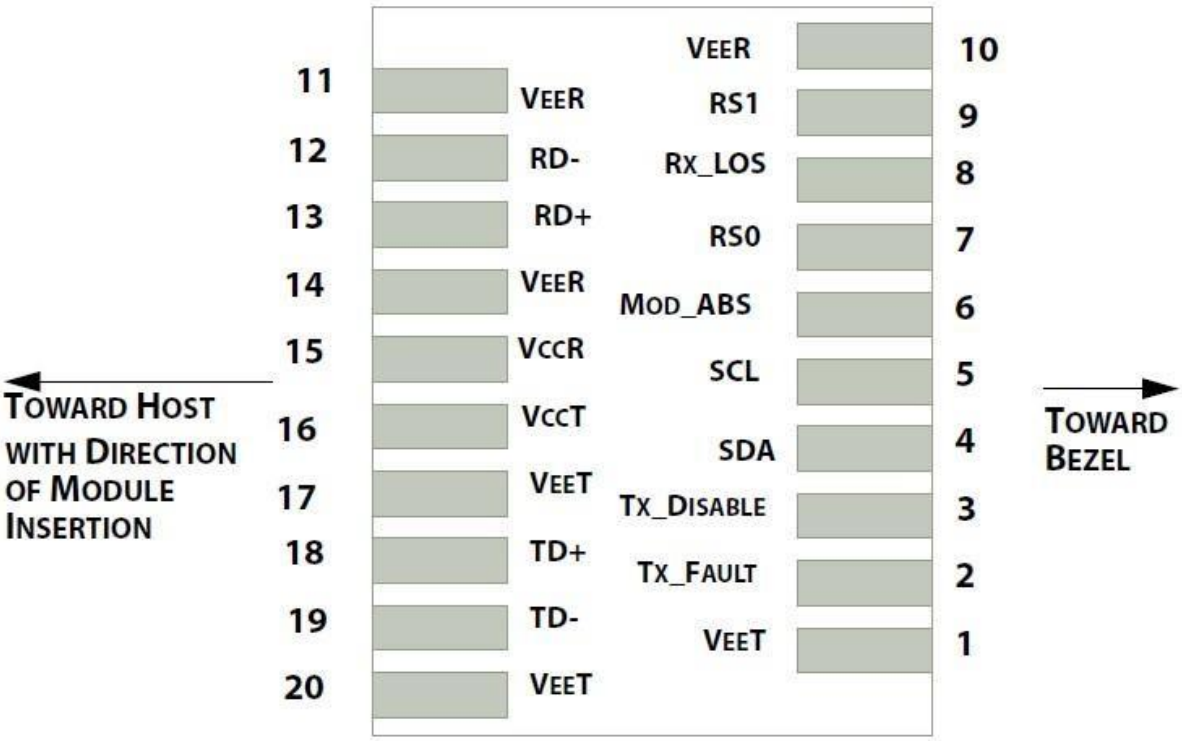


## Pin Function Definitions

| PIN # | Name | Function | Notes |
|---|---|---|---|
| 1 | VeeT | Module transmitter ground | 1 |
| 2 | Tx Fault | Module transmitter fault | 2 |
| 3 | Tx Disable | Transmitter Disable; Turns off transmitter laser output | 3 |
| 4 | SDL | 2 wire serial interface data input/output (SDA) | |
| 5 | SCL | 2 wire serial interface clock input (SCL) | |
| 6 | MOD-ABS | Module Absent, connect to VeeR or VeeT in the module | 2 |

| | | | |
|---|---|---|---|
| 7 | RS0 | Rate select0, optionally control SFP receiver. When high, input data rate >4.5Gb/ s; when low, input data rate <=4.5Gb/s | |
| 8 | LOS | Receiver Loss of Signal Indication | 4 |
| 9 | RS1 | Rate select0, optionally control SFP transmitter. When high, input data rate >4.5Gb/s; when low, input data rate <=4.5Gb/s | |
| 10 | VeeR | Module receiver ground | 1 |
| 11 | VeeR | Module receiver ground | 1 |
| 12 | RD- | Receiver inverted data out put | |
| 13 | RD+ | Receiver non-inverted data out put | |
| 14 | VeeR | Module receiver ground | 1 |
| 15 | VccR | Module receiver 3.3V supply | |
| 16 | VccT | Module transmitter 3.3V supply | |
| 17 | VeeT | Module transmitter ground | 1 |
| 18 | TD+ | Transmitter inverted data out put | |
| 19 | TD- | Transmitter non-inverted data out put | |
| 20 | VeeT | Module transmitter ground | 1 |

Note:

1. The module ground pins shall be isolated from the module case.
2. This pin is an open collector/drain output pin and shall be pulled up with 4.7K-10Kohms to Host_Vcc on the host board.
3. This pin shall be pulled up with 4.7K-10Kohms to VccT in the module.
4. This pin is an open collector/drain output pin and shall be pulled up with 4.7K-10Kohms to Host_Vcc on the host board.

## SFP Module EEPROM Information and Management

The SFP modules implement the 2-wire serial communication protocol as defined in the SFP -8472. The serial ID information of the SFP modules and Digital Diagnostic Monitor parameters can be accessed through the $I^2C$ interface at address A0h and A2h. The memory is mapped in Table 1. Detailed ID information (A0h) is listed in Table 2. And the DDM specification at address A2h. For more details of the memory map and byte definitions, please refer to the SFF-8472, “Digital Diagnostic Monitoring Interface for Optical Transceivers”. The DDM parameters have been internally calibrated.

**Table 1.** Digital Diagnostic Memory Map (Specific Data Field Descriptions)

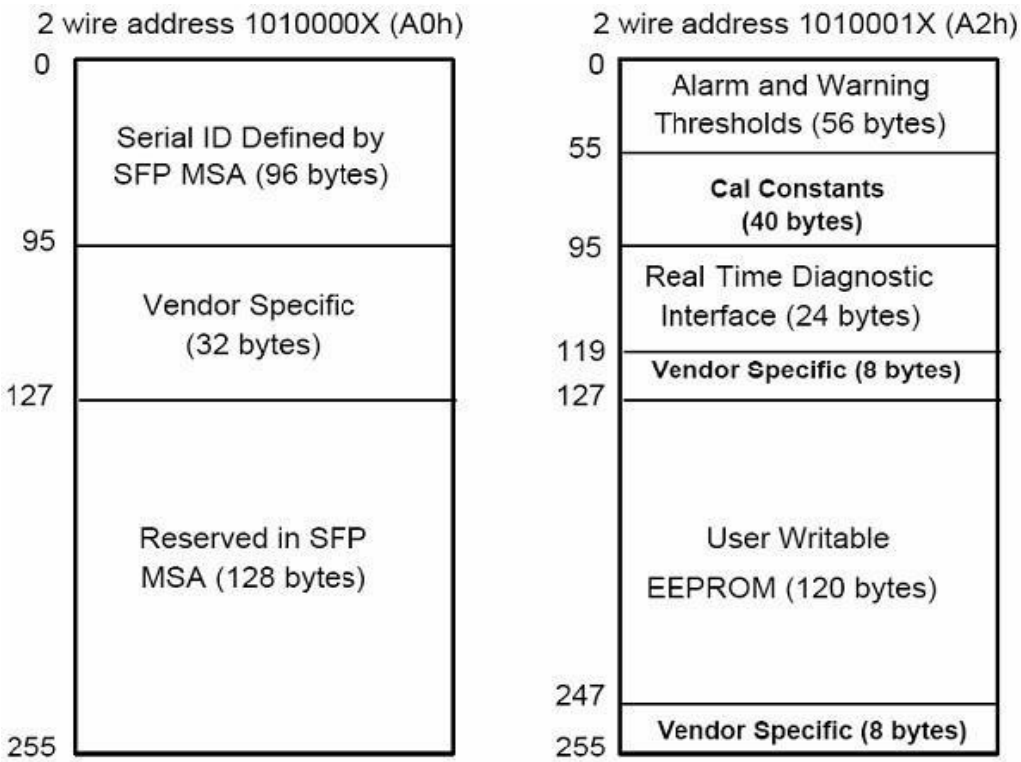

**Table 2** - EEPROM Serial ID Memory ContenP (**A0h**)

| Data Address | Length (Byte) | Name of Length | Description and ContenP |
|---|---|---|---|
| Base ID Fields | | | |
| 0 | 1 | Identifier | Type of Serial transceiver (03h=SFP) |
| 1 | 1 | Reserved | Extended identifier of type serial transceiver (04h) |
| 2 | 1 | Connector | Code of optical connector type (07=LC) |
| 3-10 | 8 | Transceiver | 1000Base-LX |
| 11 | 1 | Encoding | 8B10B |
| 12 | 1 | BR, Nominal | Nominal baud rate, unit of 100Mbps |
| 13-14 | 2 | Reserved | (0000h) |
| 15 | 1 | Length(9um) | Link length supported for 9/125um fiber, uniP of 100m |
| 16 | 1 | Length(50um) | Link length supported for 50/125um fiber, uniP of 10m |
| 17 | 1 | Length(62.5um) | Link length supported for 62.5/125um fiber, uniP of 10m |
| 18 | 1 | Length(Copper) | Link length supported for copper, uniP of meters |
| 19 | 1 | Reserved | |
| 20-35 | 16 | Vendor Name | SFP vendor name: TIBTRONIX |
| 36 | 1 | Reserved | |
| 37-39 | 3 | Vendor OUI | SFP transceiver vendor OUI ID |
| 40-55 | 16 | Vendor PN | Part Number: “PPL1GH0D-Dxx” (ASCII) |
| 56-59 | 4 | Vendor rev | Revision level for part number |
| 60-62 | 3 | Reserved | |

| | | | |
|---|---|---|---|
| 63 | 1 | CCID | Least significant byte of sum of data in address 0-62 |
| Extended ID Fields | | | |
| 64-65 | 2 | Option | Indicates which optical SFP signals are implemented (001Ah = LOS, TX_FAULT, TX_DISABLE all supported) |
| 66 | 1 | BR, max | Upper bit rate margin, uniP of % |
| 67 | 1 | BR, min | Lower bit rate margin, uniP of % |
| 68-83 | 16 | Vendor SN | Serial number (ASCII) |
| 84-91 | 8 | Date code | TIBTRONIX's Manufacturing date code |
| 92-94 | 3 | Reserved | |
| 95 | 1 | CCEX | Check code for the extended ID Fields (addresses 64 to 94) |
| Vendor Specific ID Fields | | | |
| 96-127 | 32 | Readable | TIBTRONIX specific date, read only |
| 128-255 | 128 | Reserved | Reserved for SFF-8079 |

## Digital Diagnostic Monitor Characteristics

| Data Address | Parameter | Accuracy | Unit |
|---|---|---|---|
| 96-97 | Transceiver Internal Temperature | ±3.0 | °C |
| 98-99 | VCC3 Internal Supply Voltage | ±3.0 | % |
| 100-101 | Laser Bias Current | ±10 | % |
| 102-103 | Tx Output Power | ±3.0 | dB |
| 104-105 | Rx Input Power | ±3.0 | dB |

## Regulatory Compliance

The NS-SFP-Dxx complies with international Electromagnetic Compatibility (EMC) and international safety requiremenP and standards (see details in Table following).

| | | |
|---|---|---|
| Electrostatic Discharge (ESD) to the Electrical Pins | MIL-STD-883E Method 3015.7 | Class 1(>1000 V) |
| Electrostatic Discharge (ESD) to the Duplex LC Receptacle | IEC 61000-4-2 GR-1089-CORE | Compatible with standards |
| Electromagnetic Interference (EMI) | FCC Part 15 Class B EN55022 Class B (CISPR 22B) VCCI Class B | Compatible with standards |
| Laser Eye Safety | FDA 21CFR 1040.10 and 1040.11 EN60950, EN (IEC) 60825-1,2 | Compatible with Class 1 laser product. |

- **Recommended Circuit**

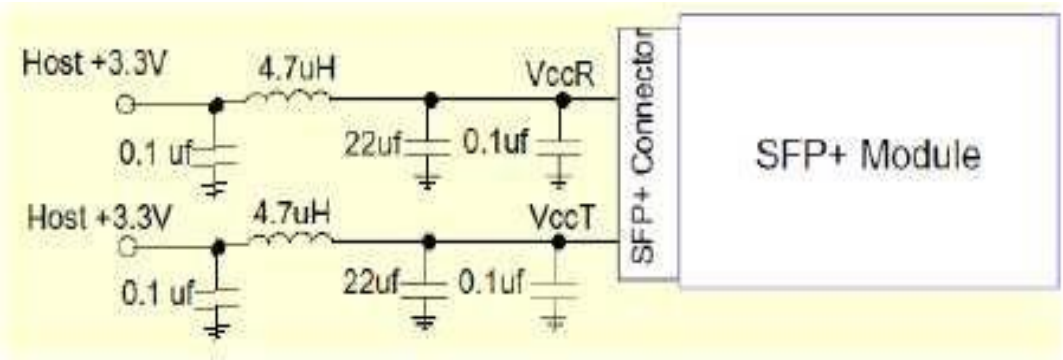

**Recommended Host Board Power Supply Circuit**

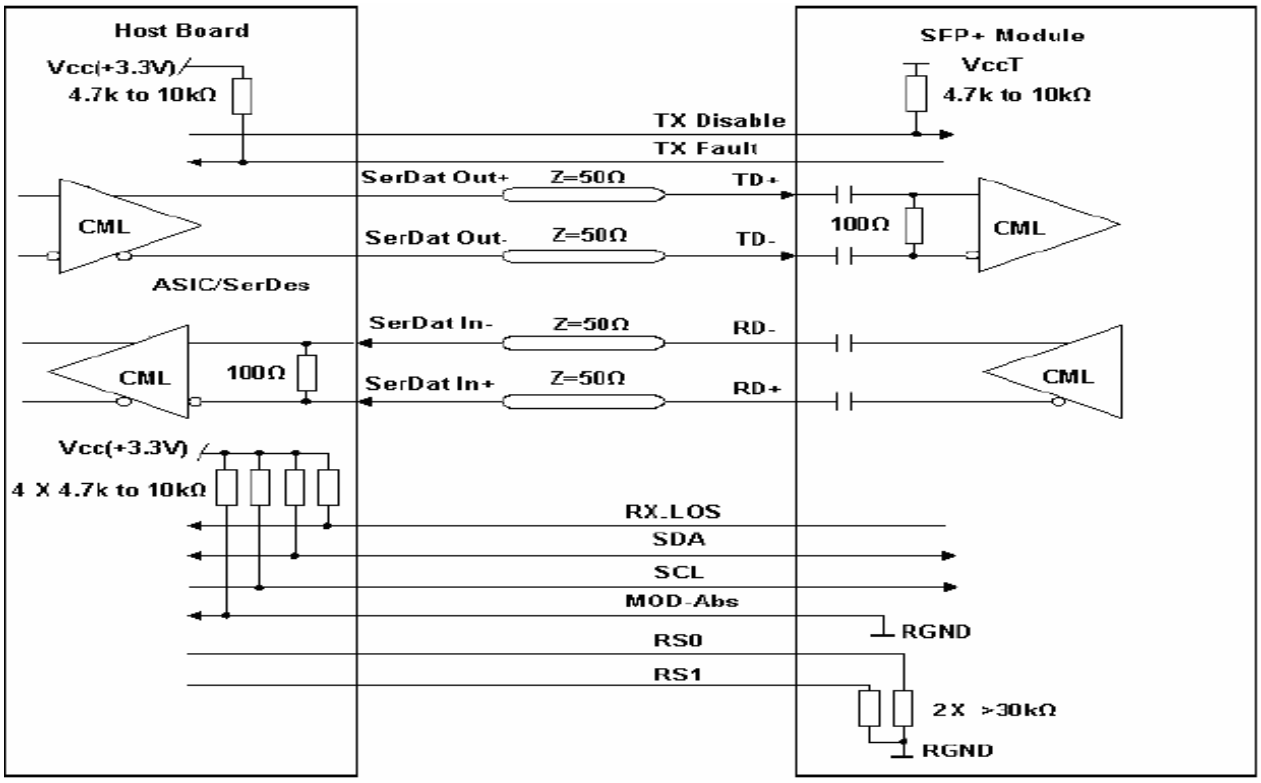


Recommended High-speed Interface Circuit

## Mechanical Dimensions

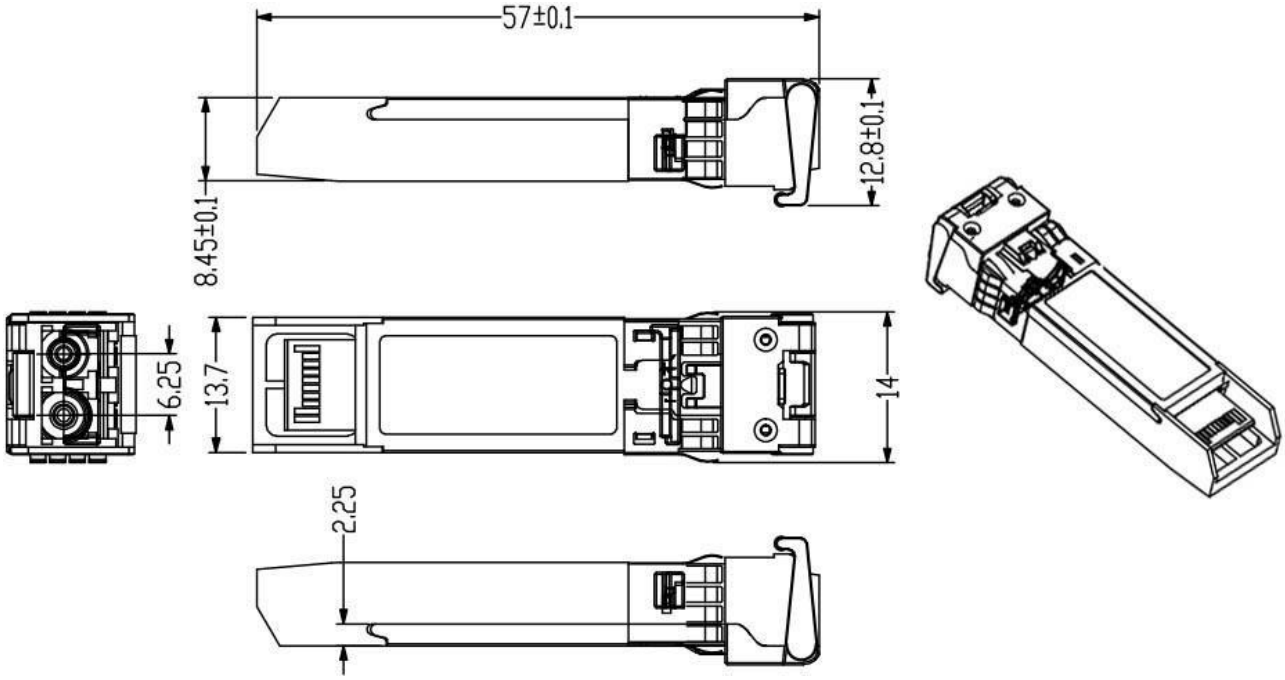


## Order Information:

**PPL1GH0D-Dxx** **XX: 100GHZ ITU Grid Wavelength**

| Part No. | Central Wavelength(nm) | Frequency (THZ) |
|---|---|---|
| NS-SFP-D61 | 1528.77 | 196.1 |
| NS-SFP-D60 | 1529.55 | 196.0 |
| NS-SFP-D59 | 1530.33 | 195.9 |
| NS-SFP-D58 | 1531.12 | 195.8 |
| NS-SFP-D57 | 1531.90 | 195.7 |
| NS-SFP-D56 | 1532.68 | 195.6 |

| | | |
|---|---|---|
| NS-SFP-D55 | 1533.47 | 195.5 |
| NS-SFP-D54 | 1534.25 | 195.4 |
| NS-SFP-D53 | 1535.04 | 195.3 |
| NS-SFP-D52 | 1535.82 | 195.2 |
| NS-SFP-D51 | 1536.61 | 195.1 |
| NS-SFP-D50 | 1537.40 | 195.0 |
| NS-SFP-D49 | 1538.19 | 194.9 |
| NS-SFP-D48 | 1538.98 | 194.8 |
| NS-SFP-D47 | 1539.77 | 194.7 |
| NS-SFP-D46 | 1540.56 | 194.6 |
| NS-SFP-D45 | 1541.35 | 194.5 |
| NS-SFP-D44 | 1542.14 | 194.4 |
| NS-SFP-D43 | 1542.94 | 194.3 |
| NS-SFP-D42 | 1543.73 | 194.2 |
| NS-SFP-D41 | 1544.53 | 194.1 |
| NS-SFP-D40 | 1545.32 | 194.0 |
| NS-SFP-D39 | 1546.12 | 193.9 |
| NS-SFP-D38 | 1546.92 | 193.8 |
| NS-SFP-D37 | 1547.72 | 193.7 |
| NS-SFP-D36 | 1548.51 | 193.6 |
| NS-SFP-D35 | 1549.32 | 193.5 |
| NS-SFP-D34 | 1550.12 | 193.4 |

| | | |
|---|---|---|
| NS-SFP-D33 | 1550.92 | 193.3 |
| NS-SFP-D32 | 1551.72 | 193.2 |
| NS-SFP-D31 | 1552.52 | 193.1 |
| NS-SFP-D30 | 1553.33 | 193.0 |
| NS-SFP-D29 | 1554.13 | 192.9 |
| NS-SFP-D28 | 1554.94 | 192.8 |
| NS-SFP-D27 | 1555.75 | 192.7 |
| NS-SFP-D26 | 1556.55 | 192.6 |
| NS-SFP-D25 | 1557.36 | 192.5 |
| NS-SFP-D24 | 1558.17 | 192.4 |
| NS-SFP-D23 | 1558.98 | 192.3 |
| NS-SFP-D22 | 1559.79 | 192.2 |
| NS-SFP-D21 | 1560.61 | 192.1 |
| NS-SFP-D20 | 1561.42 | 192.0 |
| NS-SFP-D19 | 1562.23 | 191.9 |
| NS-SFP-D18 | 1563.05 | 191.8 |
| NS-SFP-D17 | 1563.86 | 191.7 |