Проектирование сетей,
поставка оборудования, оптимизация и
поддержка IT-инфраструктуры
newnets.ru
newnets@newnets.ru
8 800 777 57 00

NS-SFP28-25G-DxxL10D

25.78Gbps SFP28 DWDM Transceiver, 10km Reach for SMF

Product Features

- Supports up to 25.78Gbps bit rates
- Hot-pluggable SFP+ footprint
- 100GHz ITU, C Band DWDM Cooled EML laser and PIN photodiode,
- Up to 10km for SMF transmission
- Compliant with SFP+ MSA and SFF-8472 with duplex LC receptacle
- Compatible with RoHS
- Single +3.3V power supply
- Power dissipation <2.3W
- Real Time Digital Diagnostic Monitoring
- Operating case temperature:

  Standard: 0 to +70°C



Applications

- 25G Ethernet
- CPRI 10

Description

The SFP28 transceivers are high performance, cost effective modules supporting data rate of 25.78Gbps and 10km transmission distance with SMF.

The transceiver consists of three sections: a Cooled EML laser transmitter, a PIN photodiode integrated with a trans-impedance preamplifier (TIA) and MCU control unit. All modules satisfy class I laser safety requirements.

The transceivers are compatible with SFP Multi-Source Agreement and SFF-8472 digital diagnostics functions.

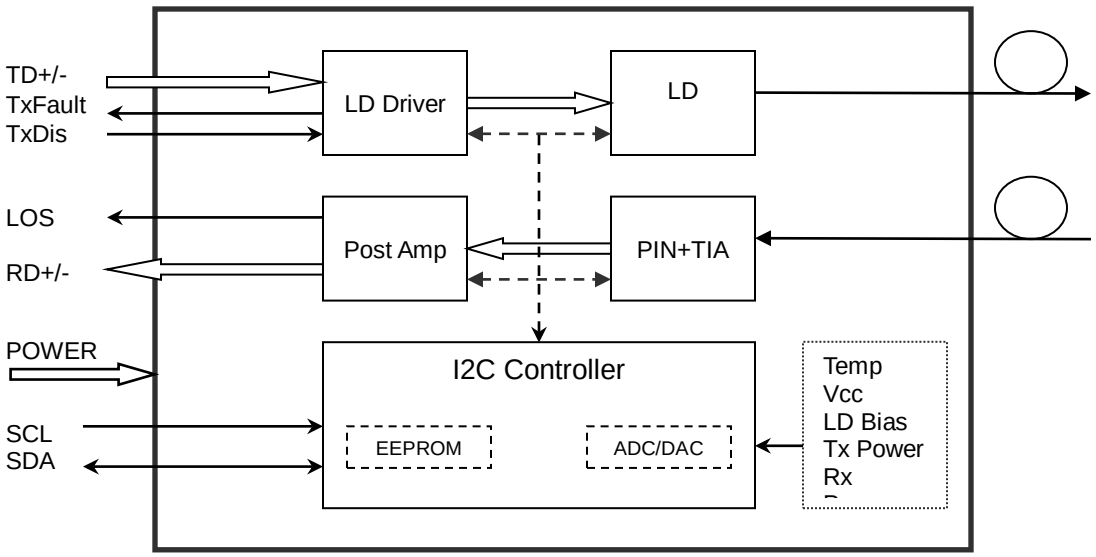

Transceiver functional diagram

Absolute Maximum Ratings

Parameter	Symbol	Min	Max	Unit
Supply Voltage	Vcc	-0.5	4.5	V
Storage Temperature	Ts	-40	+85	°C
Operating Humidity	-	5	85	%

Recommended Operating Conditions

Parameter	Symbol	Min	Typical	Max	Unit
Operating Case Temperature	Tc	0		+70	°C
Power Supply Voltage	Vcc	3.135	3.30	3.465	V
Power Supply Current	Icc			700	mA
Data Rate			25.78		Gbps

Проектирование сетей,
поставка оборудования, оптимизация и
поддержка IT-инфраструктуры
newnets.ru
newnets@newnets.ru
8 800 777 57 00

Optical and Electrical Characteristics

Parameter		Symbol	Min	Typical	Max	Unit	Notes
Transmitter							
Centre Wavelength		λc	1528.77		1563.05	nm	
Spectral Width（-20dB）		Δλ			1	nm	
Side-Mode Suppression Ratio		SMSR	30	-		dB	
Average Output Power		P_{out}	-1		+6	dBm	1
Extinction Ratio		ER	6			dB	
Data Input Swing Differential		V_{IN}	180		850	mV	2
Input Differential Impedance		Z_{IN}	90	100	110	Ω	
TX Disable	Disable		2.0		Vcc	V	
	Enable		0		0.8	V	
TX Fault	Fault		2.0		Vcc	V	
	Normal		0		0.8	V	
Receiver							
Centre Wavelength		λc	1510		1570	nm	
Receiver Sensitivity					-15	dBm	3
Receiver Overload			2			dBm	3
LOS De-Assert		LOS_D			-16	dBm	
LOS Assert		LOS_A	-35			dBm	
LOS Hysteresis			0.5			dB	
Data Output Swing Differential		V_{out}	300		900	mV	4
LOS		High	2.0		Vcc	V	
		Low			0.8	V	

Notes:
1. The optical power is launched into SMF.
2. PECL input, internally AC-coupled and terminated.
3. Measured with a PRBS 2^{31}-1 test pattern @25.78Gbps, BER ≤5E-5.
4. Internally AC-coupled.

Проектирование сетей,
поставка оборудования, оптимизация и
поддержка IT-инфраструктуры
newnets.ru
newnets@newnets.ru
8 800 777 57 00

Timing and Electrical

Parameter	Symbol	Min	Typical	Max	Unit
Tx Disable Negate Time	t_on			1	ms
Tx Disable Assert Time	t_off			10	µs
Time To Initialize, including Reset of Tx Fault	t_init			300	ms
Tx Fault Assert Time	t_fault			100	µs
Tx Disable To Reset	t_reset	10			µs
LOS Assert Time	t_loss_on			100	µs
LOS De-assert Time	t_loss_off			100	µs
Serial ID Clock Rate	f_serial_clock		100	400	KHz
MOD_DEF (0:2)-High	V_H	2		Vcc	V
MOD_DEF (0:2)-Low	V_L			0.8	V

Diagnostics

Parameter	Range	Unit	Accuracy	Calibration
Temperature	0 to +70	°C	±3°C	Internal
Voltage	3.0 to 3.6	V	±3%	Internal
Bias Current	0 to 120	mA	±10%	Internal
TX Power	-1 to +6	dBm	±3dB	Internal
RX Power	-15 to 2	dBm	±3dB	Internal

Проектирование сетей,
поставка оборудования, оптимизация и
поддержка IT-инфраструктуры
newnets.ru
newnets@newnets.ru
8 800 777 57 00

Digital Diagnostic Memory Map

The transceivers provide serial ID memory contents and diagnostic information about the present operating conditions by the 2-wire serial interface (SCL, SDA).

The diagnostic information with internal calibration or external calibration all are implemented, including received power monitoring, transmitted power monitoring, bias current monitoring, supply voltage monitoring and temperature monitoring.

The digital diagnostic memory map specific data field defines as following.

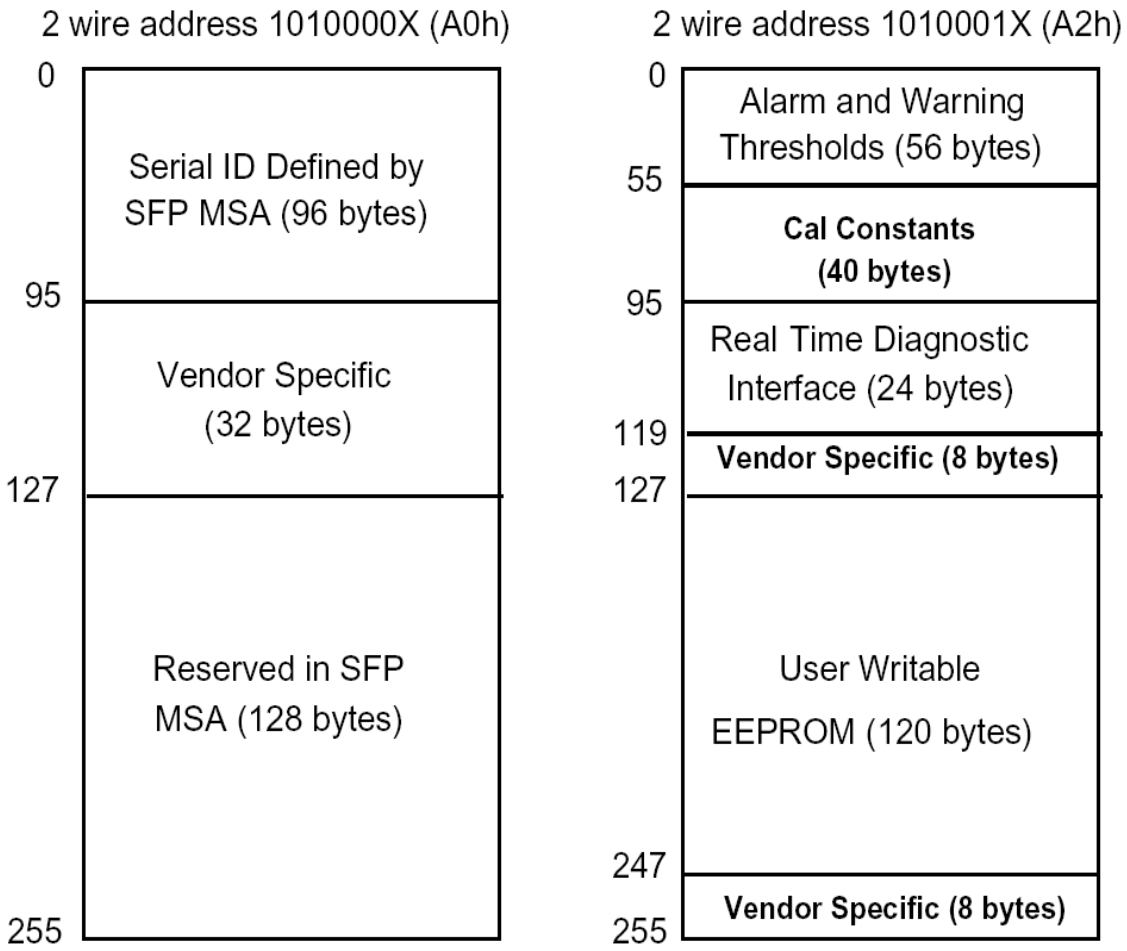

Проектирование сетей,
поставка оборудования, оптимизация и
поддержка IT-инфраструктуры
newnets.ru
newnets@newnets.ru
8 800 777 57 00

Pin Descriptions

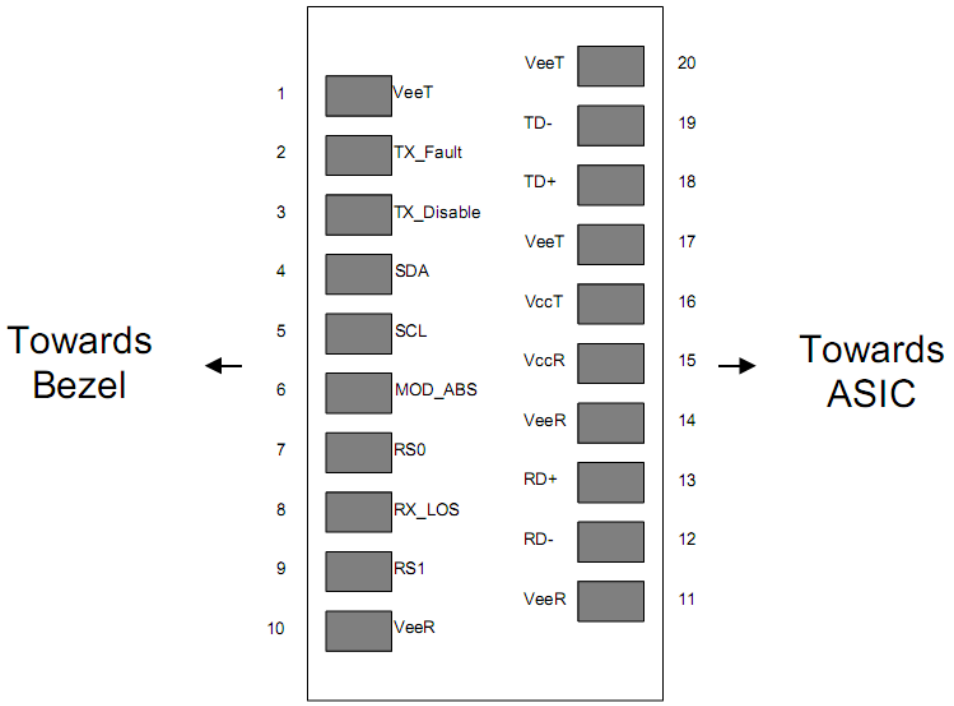

Pin	Signal Name	Description	Plug Seq.	Notes
1	V_{EET}	Transmitter Ground	1	
2	TX FAULT	Transmitter Fault Indication	3	Note 1
3	TX DISABLE	Transmitter Disable	3	Note 2
4	SDA	SDA Serial Data Signal	3	
5	SCL	SCL Serial Clock Signal	3	
6	MOD_ABS	Module Absent. Grounded within the module	3	
7	RS0	Not Connected	3	
8	LOS	Loss of Signal	3	Note 3
9	RS1	Not Connected	3	
10	V_{EER}	Receiver ground	1	
11	V_{EER}	Receiver ground	1	
12	RD-	Inv. Received Data Out	3	Note 4
13	RD+	Received Data Out	3	Note 4
14	V_{EER}	Receiver ground	1	
15	V_{CCR}	Receiver Power Supply	2	

16	V_{CCT}	Transmitter Power Supply	2	
17	V_{EET}	Transmitter Ground	1	
18	TD+	Transmit Data In	3	Note 5
19	TD-	Inv. Transmit Data In	3	Note 5
20	V_{EET}	Transmitter Ground	1	

Notes:
Plug Seq.: Pin engagement sequence during hot plugging.
1) TX Fault is an open collector output, which should be pulled up with a 4.7k~10kΩ resistor on the host board to a voltage between 2.0V and Vcc+0.3V. Logic 0 indicates normal operation; Logic 1 indicates a laser fault of some kind. In the low state, the output will be pulled to less than 0.8V.
2) Laser output disabled on TDIS >2.0V or open, enabled on TDIS <0.8V.
3) LOS is open collector output. Should be pulled up with 4.7k~10kΩ on host board to a voltage between 2.0V and 3.6V. Logic 0 indicates normal operation; logic 1 indicates loss of signal.
4) RD-/+: These are the differential receiver outputs. They are internally AC-coupled 100 differential lines which should be terminated with 100Ω (differential) at the user SERDES.
5) TD-/+: These are the differential transmitter inputs. They are internally AC-coupled, differential lines with 100Ω differential termination inside the module.

Проектирование сетей,
поставка оборудования, оптимизация и
поддержка IT-инфраструктуры
newnets.ru
newnets@newnets.ru
8 800 777 57 00

Recommended Interface Circuit

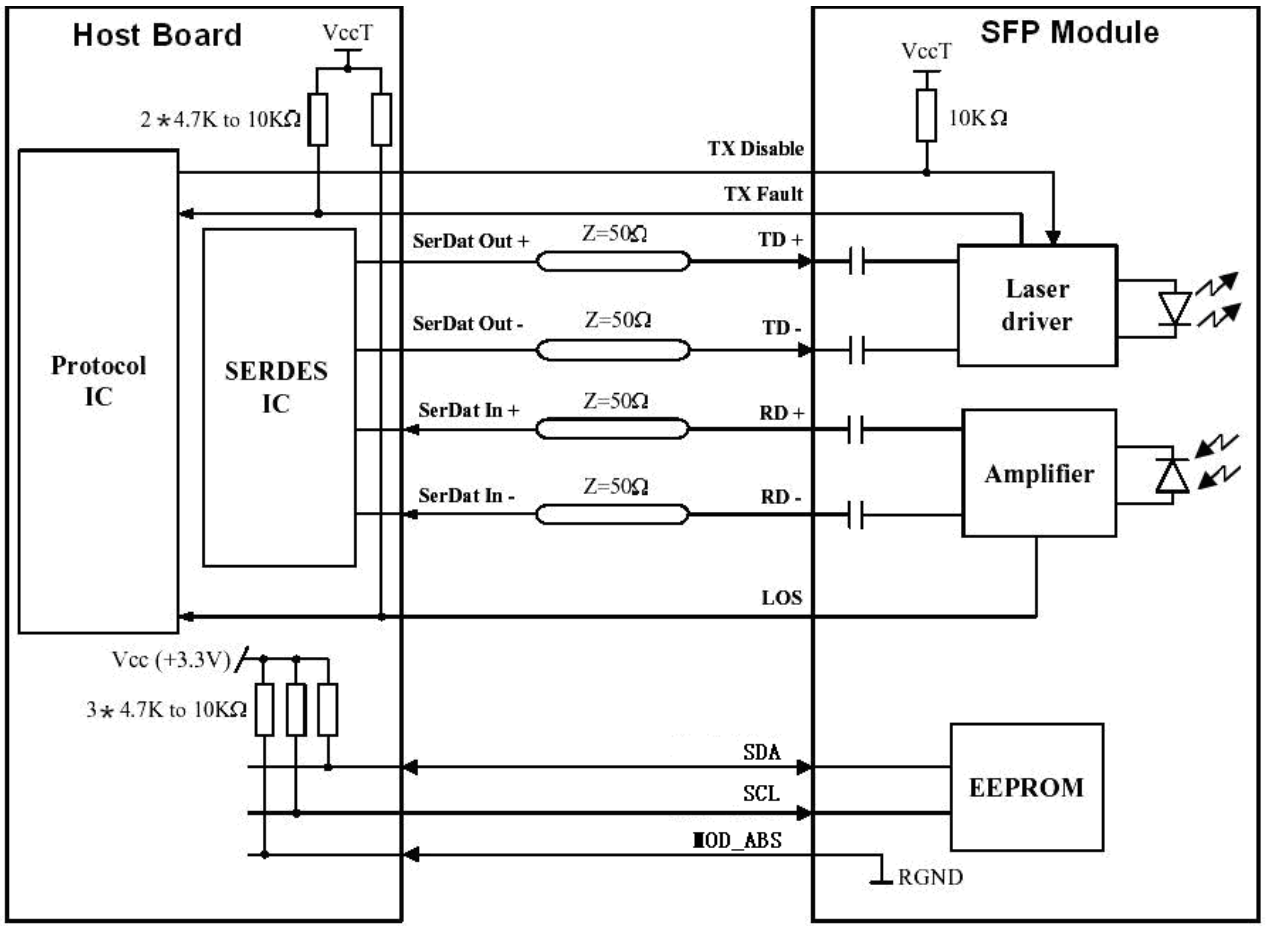

Mechanical Dimensions

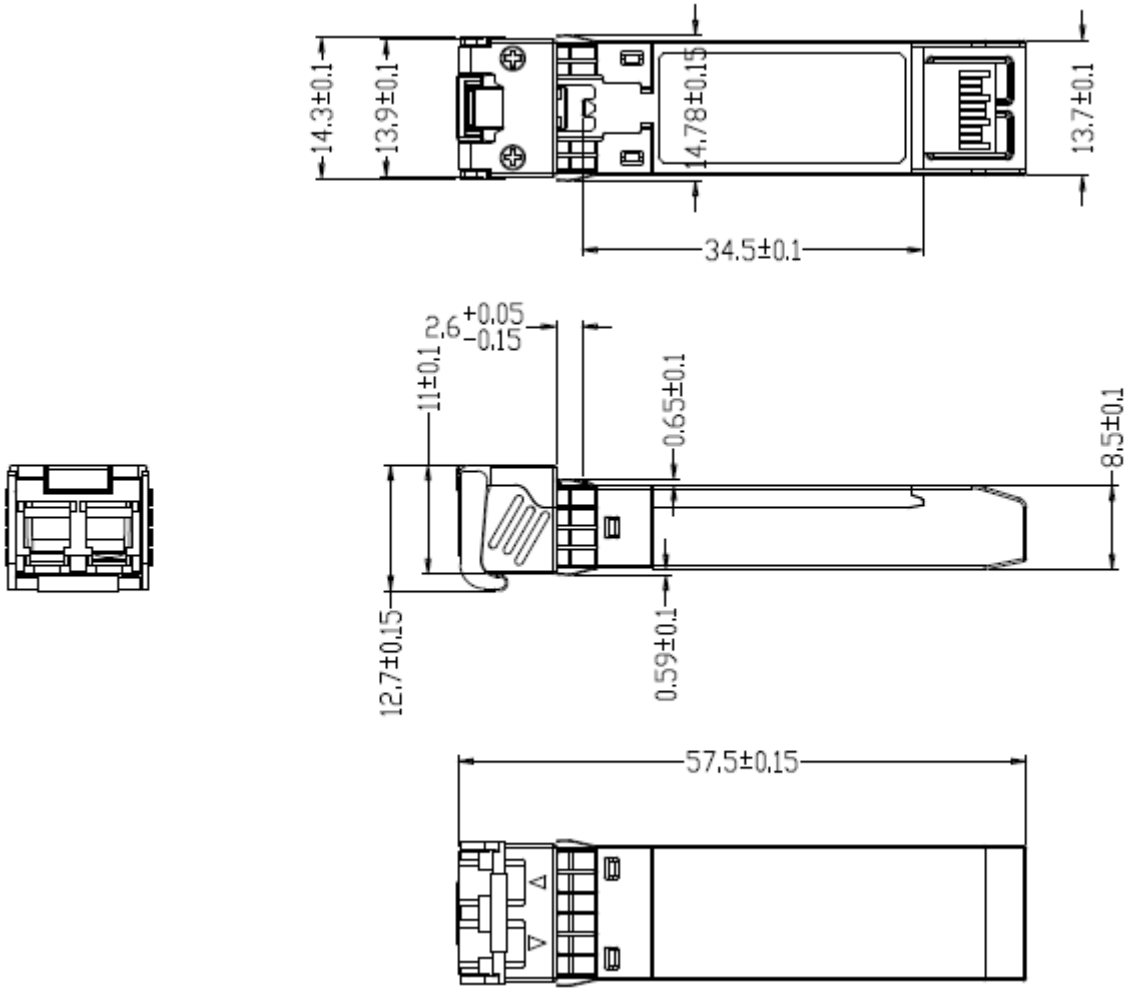

Проектирование сетей,
поставка оборудования, оптимизация и
поддержка IT-инфраструктуры
newnets.ru
newnets@newnets.ru
8 800 777 57 00

Ordering information

Part Number	Product Description
NS-SFP28-25G-D**xx**L10D	1528.77~1563.05nm DWDM, 10km, DDM, 0°C~+70°C

***xx – channel product code**

λC Wavelength Guide					
ITU Channel Product Code	**Frequency(THz)**	**Wavelength**	**ITU Channel Product Code**	**Frequency(THz)**	**Wavelength**
18	191.8	1563.05	40	194.0	1545.32
19	191.9	1562.23	41	194.1	1544.53
20	192.0	1561.42	42	194.2	1543.73
21	192.1	1560.61	43	194.3	1542.94
22	192.2	1559.79	44	194.4	1542.14
23	192.3	1558.98	45	194.5	1541.35
24	192.4	1558.17	46	194.6	1540.56
25	192.5	1557.36	47	194.7	1539.77
26	192.6	1556.55	48	194.8	1538.98
27	192.7	1555.75	49	194.9	1538.19
28	192.8	1554.94	50	195.0	1537.40
29	192.9	1554.13	51	195.1	1536.61
30	193.0	1553.33	52	195.2	1535.82
31	193.1	1552.52	53	195.3	1535.04
32	193.2	1551.72	54	195.4	1534.25
33	193.3	1550.92	55	195.5	1533.47
34	193.4	1550.12	56	195.6	1532.68
35	193.5	1549.32	57	195.7	1531.90
36	193.6	1548.51	58	195.8	1531.12
37	193.7	1547.72	59	195.9	1530.33
38	193.8	1546.92	60	196.0	1529.55
39	193.9	1546.12	61	196.1	1528.77