NS-SFP-STM1-L20D

155Mbps SFP 1310nm 20km

Особенности

- 155Mbps скорость передачи данных
- 1310нм FP лазер и PIN фотоприемник для передачи до 20км
- Согласован с SFP MSA и SFF-8472 с дуплексным LC коннектором
- DDM
- Согласован с RoHS
- Источник питания +3,3В
- Рабочие температуры
  Стандартные : -5 to +70°C
  Расширенные : -40 to +85°C



Применение

SDH STM-1, S-1.1,L-1.1, L-1.2
SONET OC-3 IR1,LR1,LR2

Описание

Высоко эффективные трансиверы со скоростью передачи данных 155Mbps
и дальностью связи до 20км с SMF.
Трансивер состоит из 3х секций: FP лазерный передатчик, PIN фотодиод интегрированный с TIA и MCU управляющая панель. Все модули удовлетворяют требованиям безопасности лазера класса I.
Трансиверы согласованы с SFP Multi-Source Agreement (MSA) и SFF-8472.

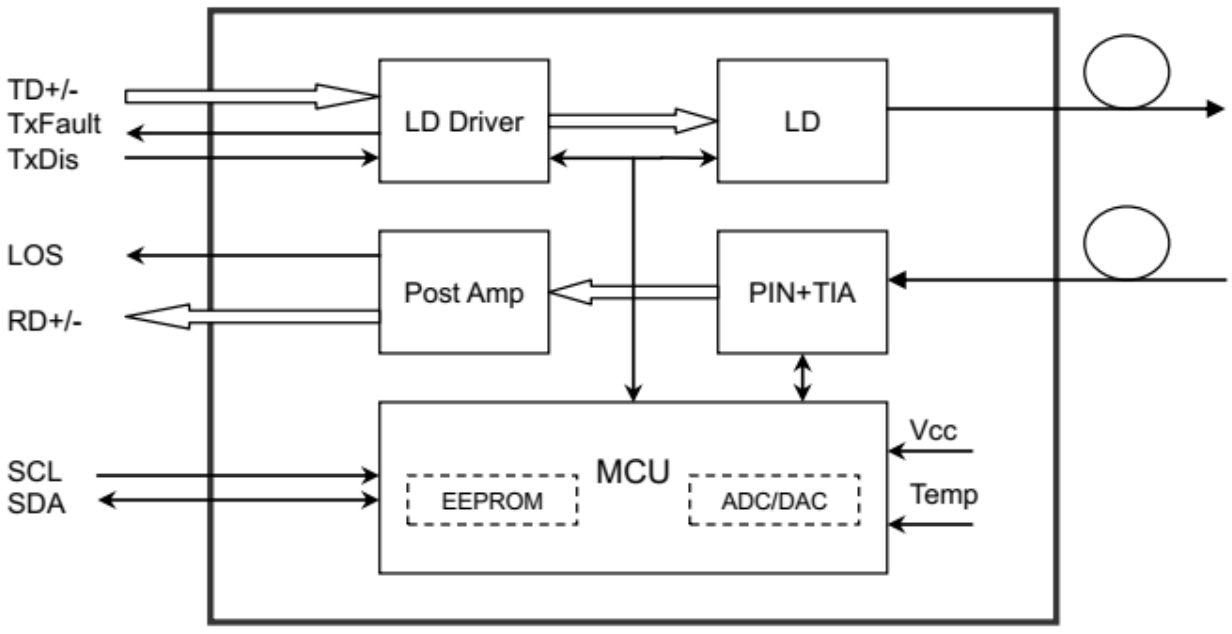

Абсолютные максимальные показатели

Таблица 1

Parameter	Symbol	Min	Max
Supply Voltage	Vcc	-0.5	4.5
Storage Temperature	Ts	-40	+85
Operating Humidity	-	5	85

Рекомендуемые условия эксплуатации

Таблица 2

Parameter		Symbol	Min	Typical	Max	Unit
Operating Case Temperature	Standard	Tc	0		+70	°C
	Industrial		-40		+85	°C
Power Supply Voltage		Vcc	3.13	3.3	3.47	V
Power Supply Current		Icc			300	mA
Data Rate				155		Mbp

Оптические и электрические характеристики

NS-SFP-STM1-L20D: (FP and PIN, 1310nm, 20km Reach)

Таблица 3

Parameter		Symbol	Min	Typical	Max	Unit	Notes
Transmitter							
Centre Wavelength		λc	1260	1310	1360	nm	-
Spectral Width (RMS)		Δλ	-	-	4	nm	-
Average Output Power		Pout	-14	-	-8	dBm	1
Extinction Ratio		ER	9	-	-	dB	-
Data Input Swing Differential		VIN	400	-	1800	mV	2
Input Differential Impedance		ZIN	90	100	110	Ω	-
TX Disable	Disable		2.0	-	Vcc	V	-
	Enable		0	-	0.8	V	-
TX Fault	Fault		2.0	-	Vcc	V	-
	Normal		0	-	0.8	V	-
Receiver							
Centre Wavelength		λc	1260	-	1580	nm	-
Receiver Sensitivity		-32	-	-	-32	dBm	3
Receiver Overload		-3	-3	-	-	dBm	3
LOS De-Assert		LOSD	-	-	-34	dBm	-
LOS Assert		LOSA	-45	-	-	dBm	-
LOS Hysteresis		1	1	-	4	dB	-
Data Output Swing Differential		Vout	370	-	1800	mV	4
LOS	High		2.0	-	Vcc	V	-
	Low		0.8	-	0.8	V	-

Notes:

1. The optical power is launched into SMF.
2. PECL input, internally AC-coupled and terminated.
3. Measured with a PRBS 2_{23}-1 test pattern @155Mbps, BER ≤1×10^{-10}
4. Internally AC-coup

Временные характеристики

Таблица 4

Parameter	Symbol	Min	Typical	Max	Unit
Tx Disable Negate Time	t_on	-	-	1	ms
Tx Disable Assert Time	t_off	-	-	10	μs
Time To Initialize, including Reset of Tx Fault	t_init	-	-	300	ms
Tx Fault Assert Time	t_fault	-	-	100	μs
Tx Disable To Reset	t_reset	10	-	-	μs
LOS Assert Time	t_loss_on	-	-	100	μs
LOS De-assert Time	t_loss_off	-	-	100	μs
Serial ID Clock Rate	f_serial_clock	-	-	400	KHz
MOD_DEF (0:2)-High	V_H	2	-	Vcc	V
MOD_DEF (0:2)-Low	V_L	-	-	0.8	V

Диагностика(DDMI)

Таблица 5

Parameter	Range	Unit	Accuracy	Calibration
Temperature	0 to +70 -40 to+85	°C	±3°C	Internal / External
Voltage	3.0 to 3.6	V	±3%	Internal / External
Bias Current	0 to 100	mA	±10%	Internal / External
TX Power	-14 to -8	dBm	±3dB	Internal / External
RX Power	-28 to -3	dBm	±3dB	Internal / External

Digital Diagnostic Memory Map

The transceivers provide serial ID memory contents and diagnostic information about the present operating conditions by the 2-wire serial interface (SCL, SDA).
The diagnostic information with internal calibration or external calibration all are implemented, including received power monitoring, transmitted power monitoring, bias current monitoring, supply voltage monitoring and temperature monitoring.
The digital diagnostic memory map specific data field defines as following.

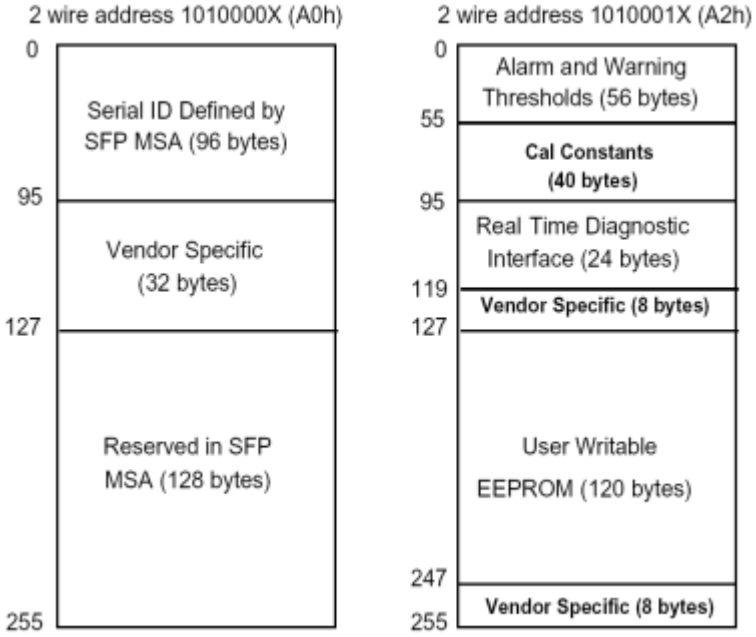

Pin Definitions

Pin Diagram

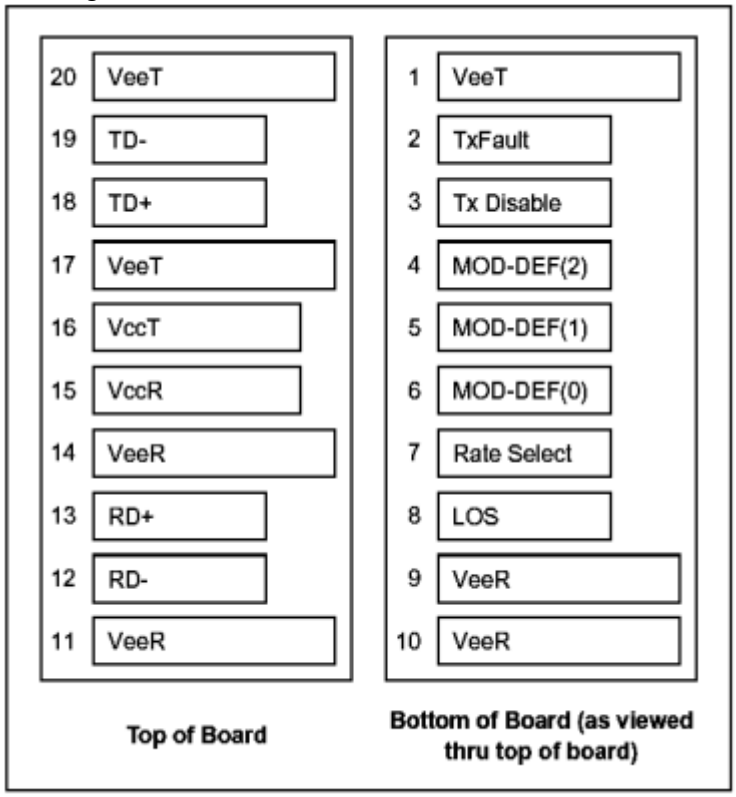

Pin Описание

Pin	Signal Name	Description	Plug Seq.	Notes
1	VEET	Transmitter Ground	1	
2	TX FAULT	Transmitter Fault Indication	3	Note 1
3	TX DISABLE	Transmitter Disable	3	Note 2
4	MOD_DEF(2)	SDA Serial Data Signal	3	Note 3
5	MOD_DEF(1)	SCL Serial Clock Signal	3	Note 3
6	MOD_DEF(0)	TTL Low	3	Note 3
7	Rate Select	Not Connected	3	
8	LOS	Loss of Signal	3	Note 4
9	VEER	Receiver ground	1	
10	VEER	Receiver ground	1	
11	VEER	Receiver ground	1	
12	RD-	Inv. Received Data Out	3	Note 5
13	RD+	Received Data Out	3	Note 5
14	VEER	Receiver ground	1	
15	VCCR	Receiver Power Supply	2	
16	VCCT	Transmitter Power Supply	2	
17	VEET	Transmitter Ground	1	
18	TD+	Transmit Data In	3	Note 6
19	TD-	Inv. Transmit Data In	3	Note 6
20	VEET	Transmitter Ground	1	

Notes:

Plug Seq.: Pin engagement sequence during hot plugging.

1) TX Fault is an open collector output, which should be pulled up with a 4.7k~10kΩ resistor on the host board to a voltage between 2.0V and Vcc+0.3V. Logic 0 indicates normal operation; Logic 1 indicates a laser fault of some kind. In the low state, the output will be pulled to less than 0.8V.

2) TX Disable is an input that is used to shut down the transmitter optical output. It is pulled up within the module with a 4.7k~10kΩ resistor. Its states are:

Low (0 to 0.8V):	Transmitter on
(>0.8V, < 2.0V):	Undefined
High (2.0 to 3.465V):	Transmitter Disabled
Open:	Transmitter Disabled

3) Mod-Def 0,1,2. These are the module definition pins. They should be pulled up with a 4.7k~10kΩ resistor on the host board. The pull-up voltage shall be VccT or VccR.

Mod-Def 0 is grounded by the module to indicate that the module is present

Mod-Def 1 is the clock line of two wire serial interface for serial ID

Mod-Def 2 is the data line of two wire serial interface for serial ID

4) LOS is an open collector output, which should be pulled up with a 4.7k~10kΩ resistor. Pull up voltage between 2.0V and Vcc+0.3V. Logic 1 indicates loss of signal; Logic 0 indicates normal operation. In the low state, the output will be pulled to less than 0.8V.

5) RD-/+: These are the differential receiver outputs. They are internally AC-coupled 100 differential lines which should be terminated with 100Ω (differential) at the user SERDES.

6) TD-/+: These are the differential transmitter inputs. They are internally AC-coupled, differential lines with 100Ω differential termination inside the module.

Recommended Interface Circuit

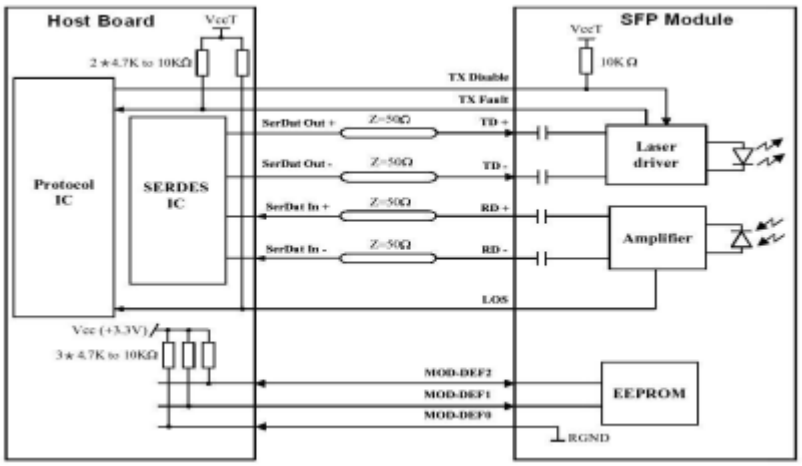

Механические габариты

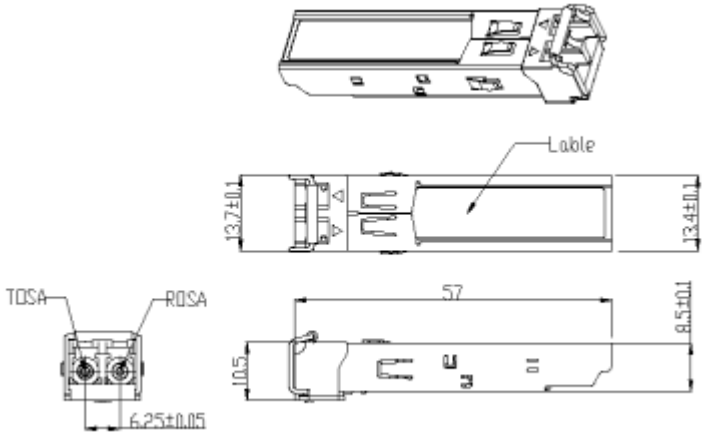

Информация для заказа

Part Number	Product Description
NS-SFP-STM1-L20	1310nm, 155Mbps, 20km, 0ºC ~ +70ºC
NS-SFP-STM1-L20D	1310nm, 155Mbps, 20km, 0ºC ~ +70ºC, With Digital Diagnostic Monitoring
NS-SFP-STM1-L20I	1310nm, 155Mbps, 20km, -40ºC ~ +85ºC
NS-SFP-STM1-L20DI	1310nm, 155Mbps, 20km, -40ºC ~ +85ºC, With Digital Diagnostic Monitoring