Проектирование сетей,
поставка оборудования, оптимизация и
поддержка IT-инфраструктуры

newnets.ru
newnets@newnets.ru
8 800 777 57 00

QSFP Active Optical Cable
NS-QSFP-40G-AOC-Ax

Особенности

♦ 4 дуплексный канала 850nm передачи
♦ Скорость передачи данных до 10.3Gbit/s на канал
♦ SFF-8436 QSFP+ соотвествие
♦ Электрический интерфейс с возможностью горячей установки
♦ Высокоскоростной интерфейс передачи данных
Differential AC-coupled
♦ 4 канала 850nm VCSEL передатчик
♦ 4 канала PIN фотоприемник
♦ Многомодовое оптическое волокно с максимальной дальностью 100m
♦ Интерфейс управления и мониторинга (Management Interface and digital diagnostic monitoring) I2C
♦ Низкое энергопотребление
♦ Корпус изолирован от контакта «Земля»
♦ Рабочая температура 0°C to +70°C
♦ 3.3V питание
♦ RoHS 6 соотвествие

Применение

♦ Infiniband сети 4 канала SDR, DDR и QDR

♦ Switches, Routers

♦ Data Centers

Описание

Кабели QSFP (active optic cables AOC) обладают высокой эффективностью, низкое потребление мощности, применяются на большие расстояния для соединения оборудования на скорости 40G, поддерживают 40G Ethernet, fiber channel и PCIe.

Выполнены в соответствии со стандартами QSFP MSA and IEEE P802.3ba 40GBASE-SR4.

Каждый QSFP AOC кабель осуществляет передачу данных параллельно на 4х интерфейсах на скорости 10Gb/s, которые в сумме дают скорость передачи данных 40Gb/s

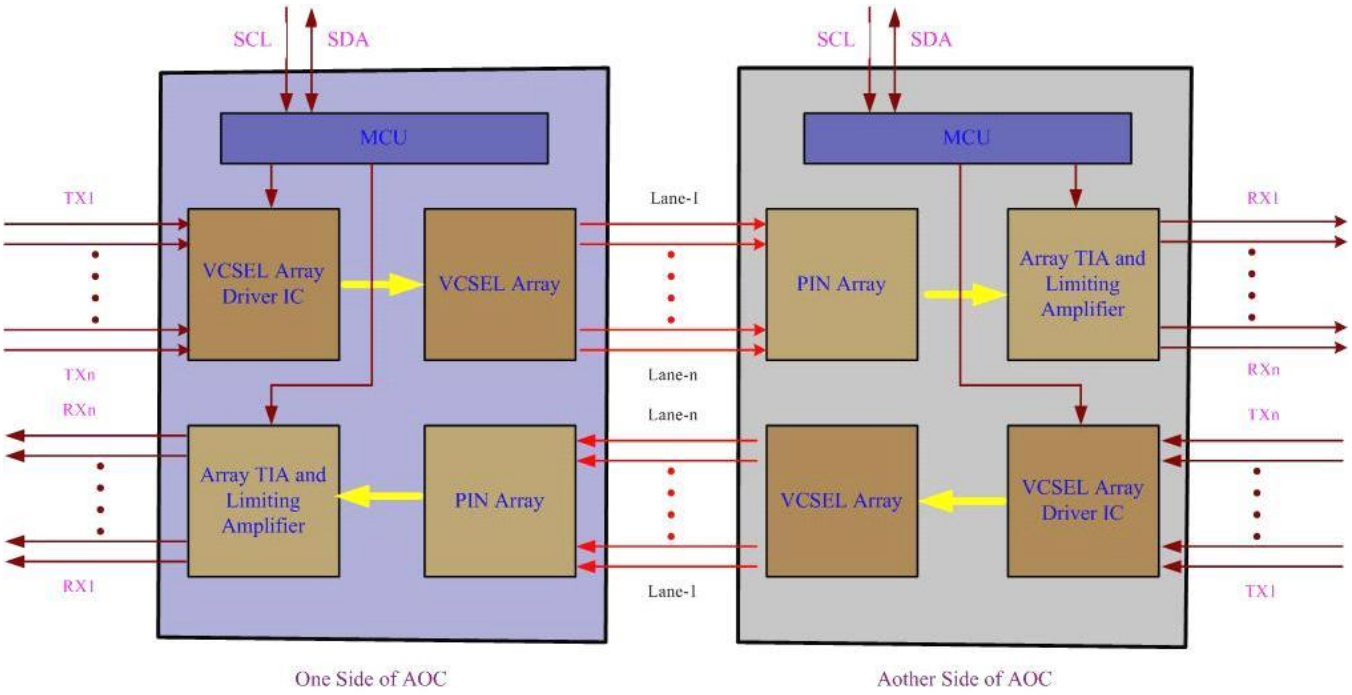

Рисунок 1 . Block Diagram модуля

AOC из видов параллельного приемопередатчика. Блок передатчика VCSEL и приемника PIN – ключевые компоненты системы, взаимодействие осуществляется через интерфейс I2C

Абсолютные максимальные характеристики

Parameter	Symbol	Min	Max	Unit
Supply Voltage	Vcc	-0.3	3.6	V
Input Voltage	Vin	-0.3	Vcc+0.3	V
Storage Temperature	Tst	-20	85	ºC
Case Operating Temperature	Top	0	70	ºC
Humidity(non-condensing)	Rh	5	95	%

Рекомендованные рабочие характеристики

Parameter	Symbol	Min	Typical	Max	Unit
Supply Voltage	Vcc	3.13	3.3	3.47	V
Operating Case temperature	Tca	0		70	ºC
Data Rate Per Lane	fd	2.5		10.3	Gbps
Humidity	Rh	5		85	%
Power Dissipation	Pm			1.5	W
Fiber Bend Radius	Rb	3			cm

Спецификация

Parameter	Symbol	Min	Typical	Max	Unit
Differential input impedance	Zin	90	100	110	ohm
Differential Output impedance	Zout	90	100	110	ohm
Differential input voltage amplitude	ΔVin	200		1200	mVp-p
Differential output voltage amplitude	ΔVout	600		800	mVp-p
Skew	Sw			300	ps
Bit Error Rate	BR			E-12	
Input Logic Level High	VIH	2.0		VCC	V
Input Logic Level Low	VIL	0		0.8	V
Output Logic Level High	VOH	VCC-0.5		VCC	V
Output Logic Level Low	VOL	0		0.4	V

Note:

1. BER=10^-12; PRBS 2^31-1@10.3125Gbps.
2. Differential input voltage amplitude is measured between TxNp and TxNn.
3. Differential output voltage amplitude is measured between RxNp and RxNn.

Pin Descriptions

Pin	Logic	Symbol	Name/Description	Ref.
1		GND	Module Ground	1
2	CML-I	Tx2-	Transmitter inverted data input	
3	CML-I	Tx2+	Transmitter non-inverted data input	
4		GND	Module Ground	1
5	CML-I	Tx4-	Transmitter inverted data input	
6	CML-I	Tx4+	Transmitter non-inverted data input	
7		GND	Module Ground	1
8	LVTTL-I	MODSEIL	Module Select	2
9	LVTTL-I	ResetL	Module Reset	2
10		VCCRx	+3.3v Receiver Power Supply	
11	LVCMOS-I	SCL	2-wire Serial interface clock	2
12	LVCMOS-I/O	SDA	2-wire Serial interface data	2
13		GND	Module Ground	1
14	CML-O	RX3+	Receiver non-inverted data output	
15	CML-O	RX3-	Receiver inverted data output	
16		GND	Module Ground	1
17	CML-O	RX1+	Receiver non-inverted data output	
18	CML-O	RX1-	Receiver inverted data output	
19		GND	Module Ground	1
20		GND	Module Ground	1
21	CML-O	RX2-	Receiver inverted data output	
22	CML-O	RX2+	Receiver non-inverted data output	
23		GND	Module Ground	1
24	CML-O	RX4-	Receiver inverted data output	
25	CML-O	RX4+	Receiver non-inverted data output	
26		GND	Module Ground	1
27	LVTTL-O	ModPrsL	Module Present, internal pulled down to GND	
28	LVTTL-O	IntL	Interrupt output, should be pulled up on host board	2
29		VCCTx	+3.3v Transmitter Power Supply	
30		VCC1	+3.3v Power Supply	
31	LVTTL-I	LPMode	Low Power Mode	2
32		GND	Module Ground	1
33	CML-I	Tx3+	Transmitter non-inverted data input	
34	CML-I	Tx3-	Transmitter inverted data input	
35		GND	Module Ground	1
36	CML-I	Tx1+	Transmitter non-inverted data input	
37	CML-I	Tx1-	Transmitter inverted data input	
38		GND	Module Ground	1

Notes:
1. Module circuit ground is isolated from module chassis ground within the module.
2. Open collector; should be pulled up with 4.7k – 10k ohms on host board to a voltage between 3.15Vand 3.6V.

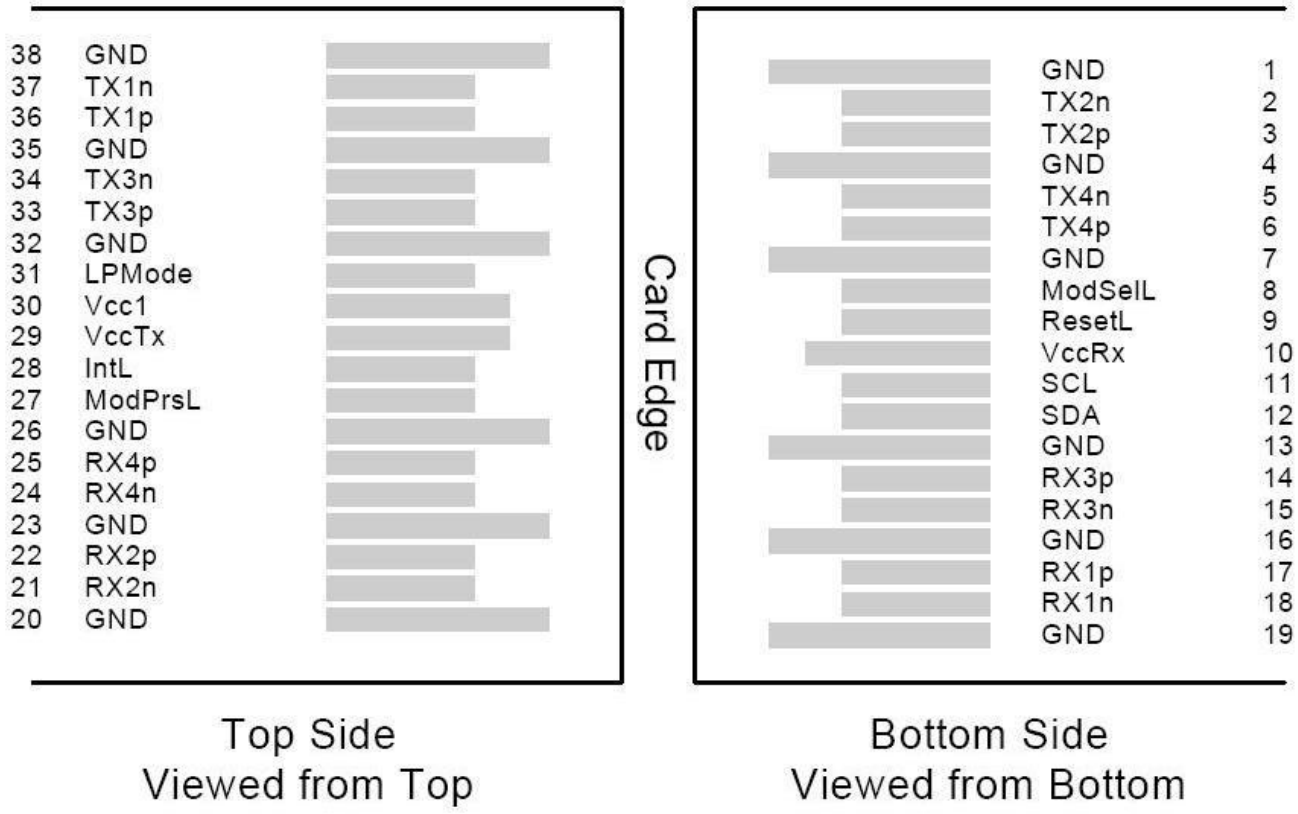

Рисунок 2. Описание Pin-out контактов

ModSelL Pin

The ModSelL is an input pin. When held low by the host, the module responds to 2-wire serial communication commands. The ModSelL allows the use of multiple QSFP modules on a single 2-wire interface bus. When the ModSelL is “High”, the module will not respond to any 2-wire interface communication from the host. ModSelL has an internal pull-up in the module.

ResetL Pin

Reset. LPMode_Reset has an internal pull-up in the module. A low level on the ResetL pin for longer than the minimum pulse length (t_Reset_init) initiates a complete module reset, returning all user module settings to their default state. Module Reset Assert Time (t_init) starts on the rising edge after the low level on the ResetL pin is released. During the execution of a reset (t_init) the host shall disregard all status bits until the module indicates a completion of the reset interrupt. The module indicates this by posting an IntL signal with

the Data_Not_Ready bit negated. Note that on power up (including hot insertion) the module will post this completion of reset interrupt without requiring a reset.

LPMode Pin

QSFP AOC operate in the low power mode (less than 1.5 W power consumption) This pin active high will decrease power consumption to less than 1W.

ModPrsL Pin

ModPrsL is pulled up to Vcc on the host board and grounded in the module. The ModPrsL is asserted “Low” when the module is inserted and deasserted “High” when the module is physically absent from the host connector.

IntL Pin

IntL is an output pin. When “Low”, it indicates a possible module operational fault or a status critical to the host system. The host identifies the source of the interrupt by using the 2-wire serial interface. The IntL pin is an open collector output and must be pulled up to Vcc on the host board.

Схема фильтра питания

The host board should use the power supply filtering shown in Figure3.

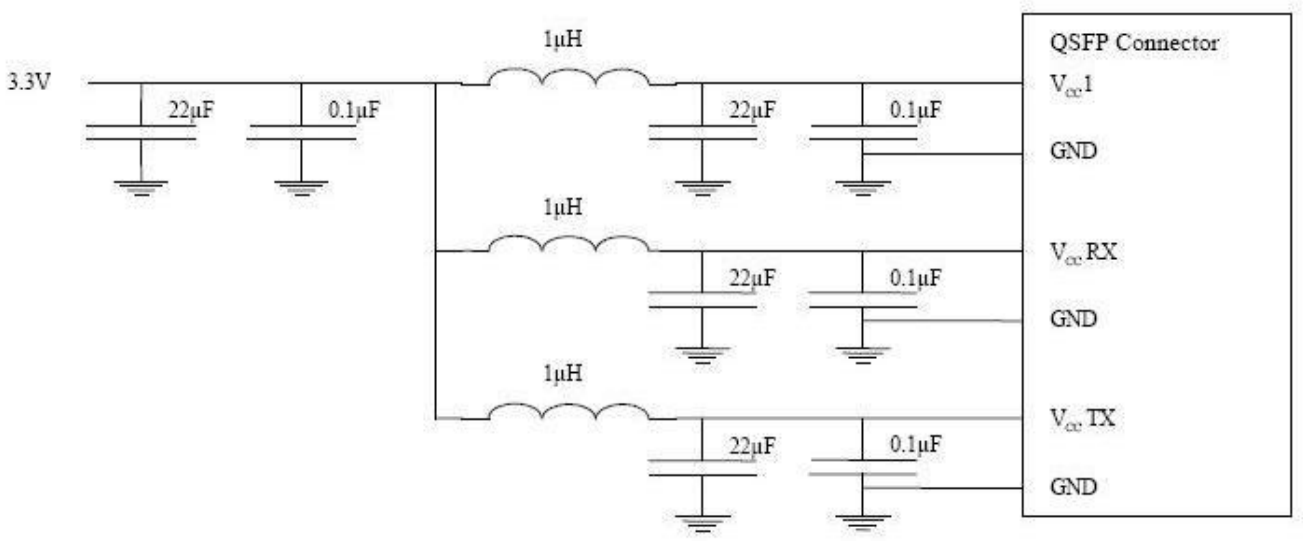

Рисунок 3 . Host Board Power Supply Filtering

DIAGNOSTIC MONITORING INTERFACE

Digital diagnostics monitoring function is available on all QSFP AOCs. A 2-wire serial interface provides user to contact with module.

The structure of the memory is shown in Figure 4. The memory space is arranged into a lower, single page, address space of 128 bytes and multiple upper address space pages. This structure permits timely access to addresses in the lower page, such as Interrupt Flags and Monitors. Less time critical time entries, such as serial ID information and threshold settings, are available with the Page Select function.

The interface address used is A0xh and is mainly used for time critical data like interrupt handling in order to enable a one-time-read for all data related to an interrupt situation. After an interrupt, IntL, has been asserted, the host can read out the flag field to determine the affected channel and type of flag.

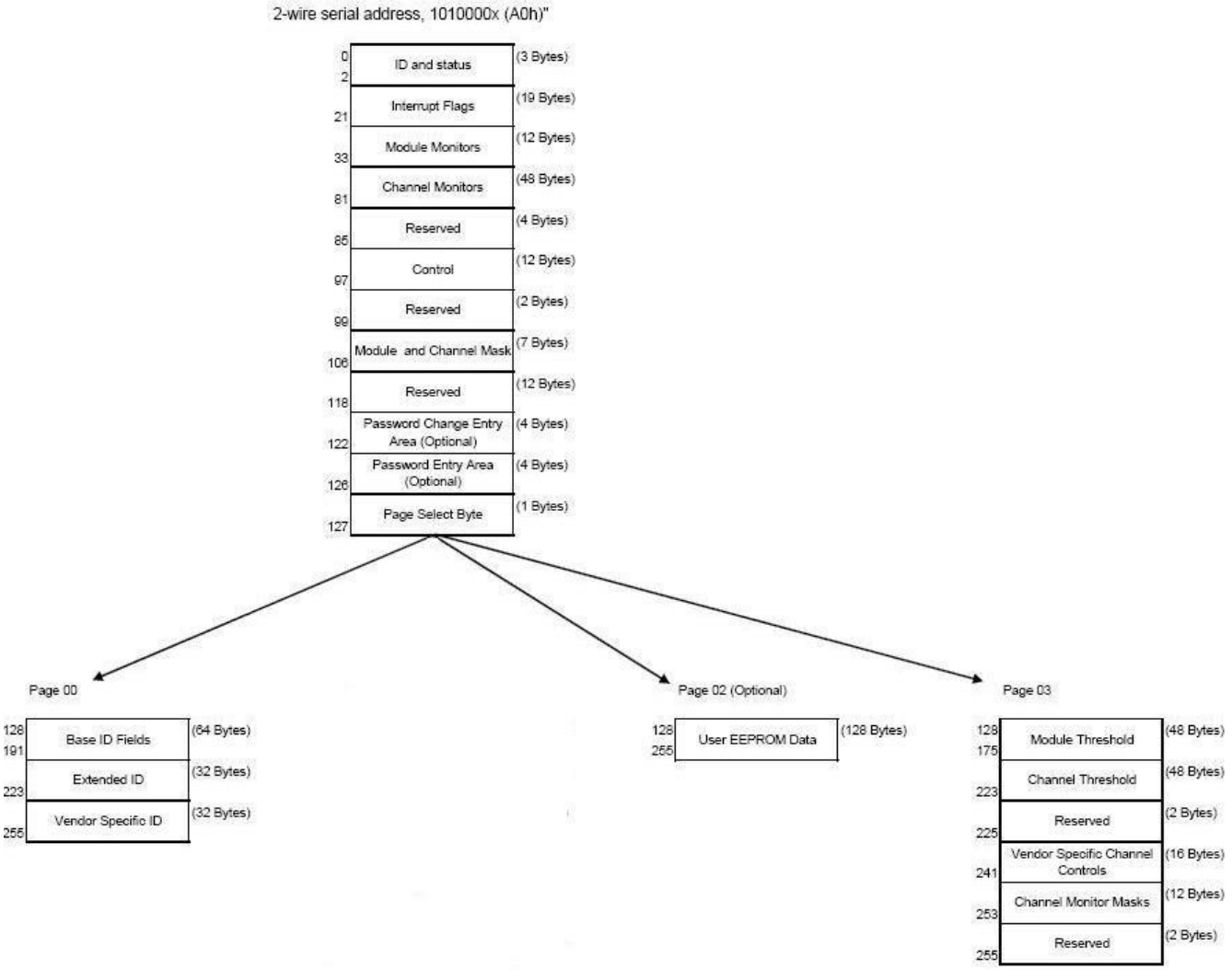

Рисунок 4. QSFP Memory Map

Проектирование сетей,
поставка оборудования, оптимизация и
поддержка IT-инфраструктуры

newnets.ru
newnets@newnets.ru
8 800 777 57 00

Byte Address	Description	Type
0	Identifier (1 Byte)	Read Only
1-2	Status (2 Bytes)	Read Only
3-21	Interrupt Flags (31 Bytes)	Read Only
22-33	Module Monitors (12 Bytes)	Read Only
34-81	Channel Monitors (48 Bytes)	Read Only
82-85	Reserved (4 Bytes)	Read Only
86-97	Control (12 Bytes)	Read/Write
98-99	Reserved (2 Bytes)	Read/Write
100-106	Module and Channel Masks (7 Bytes)	Read/Write
107-118	Reserved (12 Bytes)	Read/Write
119-122	Reserved (4 Bytes)	Read/Write
123-126	Reserved (4 Bytes)	Read/Write
127	Page Select Byte	Read/Write

Рисунок 5. Low Memory Map

Byte Address	Description	Type
128-175	Module Thresholds (48 Bytes)	Read Only
176-223	Reserved (48 Bytes)	Read Only
224-225	Reserved (2 Bytes)	Read Only
226-239	Reserved (14 Bytes)	Read/Write
240-241	Channel Controls (2 Bytes)	Read/Write
242-253	Reserved (12 Bytes)	Read/Write
254-255	Reserved (2 Bytes)	Read/Write

Рисунок 6. Page 03 Memory Map

Проектирование сетей,
поставка оборудования, оптимизация и
поддержка IT-инфраструктуры

newnets.ru
newnets@newnets.ru
8 800 777 57 00

Address	Name	Description
128	Identifier (1 Byte)	Identifier Type of serial transceiver
129	Ext. Identifier (1 Byte)	Extended identifier of serial transceiver
130	Connector (1 Byte)	Code for connector type
131-138	Transceiver (8 Bytes)	Code for electronic compatibility or optical compatibility
139	Encoding (1 Byte)	Code for serial encoding algorithm
140	BR, nominal (1 Byte)	Nominal bit rate, units of 100 Mbits/s
141	Extended RateSelect Compliance (1 Byte)	Tags for Extended RateSelect compliance
142	Length SMF (1 Byte)	Link length supported for SM fiber in km
143	Length E-50 μm (1 Byte)	Link length supported for EBW 50/125 μm fiber, units of 2 m
144	Length 50 μm (1 Byte)	Link length supported for 50/125 μm fiber, units of 1 m
145	Length 62.5 μm (1 Byte)	Link length supported for 62.5/125μm fiber, units of 1 m
146	Length copper (1 Byte)	Link length supported for copper, units of 1 m
147	Device Tech (1 Byte)	Device technology
148-163	Vendor name (16 Bytes)	QSFP vendor name (ASCII)
164	Extended Transceiver (1 Byte)	Extended Transceiver Codes for InfiniBand†
165-167	Vendor OUI (3 Bytes)	QSFP vendor IEEE vendor company ID
168-183	Vendor PN (16 Bytes)	Part number provided by QSFP vendor (ASCII)
184-185	Vendor rev (2 Bytes)	Revision level for part number provided by vendor (ASCII)
186-187	Wavelength (2 Bytes)	Nominal laser wavelength (Wavelength = value / 20 in nm)
188-189	Wavelength Tolerance (2 Bytes)	Guaranteed range of laser wavelength (+/- value) from Nominal wavelength (Wavelength Tol. = value / 200 in nm)
190	Max Case Temp (1 Byte)	Maximum Case Temperature in Degrees C
191	CC_BASE (1 Byte)	Check code for Base ID fields (addresses 128-190)
192-195	Options (4 Bytes)	Rate Select, TX Disable, TX Fault, LOS
196-211	Vendor SN (16 Bytes)	Serial number provided by vendor (ASCII)
212-219	Date code (8 Bytes)	Vendor's manufacturing date code
220	Diagnostic Monitoring Type (1 Byte)	Indicates which type of diagnostic monitoring is implemented
221	Enhanced Options (1 Byte)	Indicates which optional enhanced features are implemented
222	Reserved (1 Byte)	Reserved
223	CC_EXT	Check code for the Extended ID Fields (addresses 192-222)
224-255	Vendor Specific (32 Bytes)	Vendor Specific EEPROM

Figure7. Page 00 Memory Map

Page02 is User EEPROM and its format decided by user.

The detail description of low memory and page00.page03 upper memory please see SFF-8436 document.

Timing for Soft Control and Status Functions

Parameter	Symbol	Max	Unit	Conditions
Initialization Time	t_init	2000	ms	Time from power on[1], hot plug or rising edge of Reset until the module is fully functional[2]
Reset Init Assert Time	t_reset_init	2	µs	A Reset is generated by a low level longer than the minimum reset pulse time present on the ResetL pin.
Serial Bus Hardware Ready Time	t_serial	2000	ms	Time from power on[1] until module responds to data transmission over the 2-wire serial bus
Monitor Data Ready Time	t_data	2000	ms	Time from power on[1] to data not ready, bit 0 of Byte 2, deasserted and IntL asserted
Reset Assert Time	t_reset	2000	ms	Time from rising edge on the ResetL pin until the module is fully functional[2]
LPMode Assert Time	ton_LPMode	100	µs	Time from assertion of LPMode (Vin:LPMode = Vih) until module power consumption enters lower Power Level
IntL Assert Time	ton_IntL	200	ms	Time from occurrence of condition triggering IntL until Vout:IntL = Vol
IntL Deassert Time	toff_IntL	500	µs	Time from clear on read[3] operation of associated flag until Vout:IntL = Voh. This includes deassert times for Rx LOS, Tx Fault and other flag bits.
Rx LOS Assert Time	ton_los	100	ms	Time from Rx LOS state to Rx LOS bit set and IntL asserted
Tx Fault Assert Time	ton_Txfault	200	ms	Time from Tx Fault state to Tx Fault bit set and IntL asserted
Flag Assert Time	ton_flag	200	ms	Time from occurrence of condition triggering flag to associated flag bit set and IntL asserted
Mask Assert Time	ton_mask	100	ms	Time from mask bit set[4] until associated IntL assertion is inhibited
Mask Deassert Time	toff_mask	100	ms	Time from mask bit cleared[4] until associated IntlL operation resumes
ModSelL Assert Time	ton_ModSelL	100	µs	Time from assertion of ModSelL until module responds to data transmission over the 2-wire serial bus
ModSelL Deassert Time	toff_ModSelL	100	µs	Time from deassertion of ModSelL until the module does not respond to data transmission over the 2-wire serial bus
Power_over-ride or Power-set Assert Time	ton_Pdown	100	ms	Time from P_Down bit set [4] until module power consumption enters lower Power Level

Power_over-ride or Power-set Deassert Time	toff_Pdown	300	ms	Time from P_Down bit cleared[4] until the module is fully functional3

Note：

1. Power on is defined as the instant when supply voltages reach and remain at or above the minimum specified value.
2. Fully functional is defined as IntL asserted due to data not ready bit, bit 0 byte 2 deasserted.
3. Measured from falling clock edge after stop bit of read transaction.
4. Measured from falling clock edge after stop bit of write transaction.

Рисунок 8. Timing Specifications

Механические характеристики

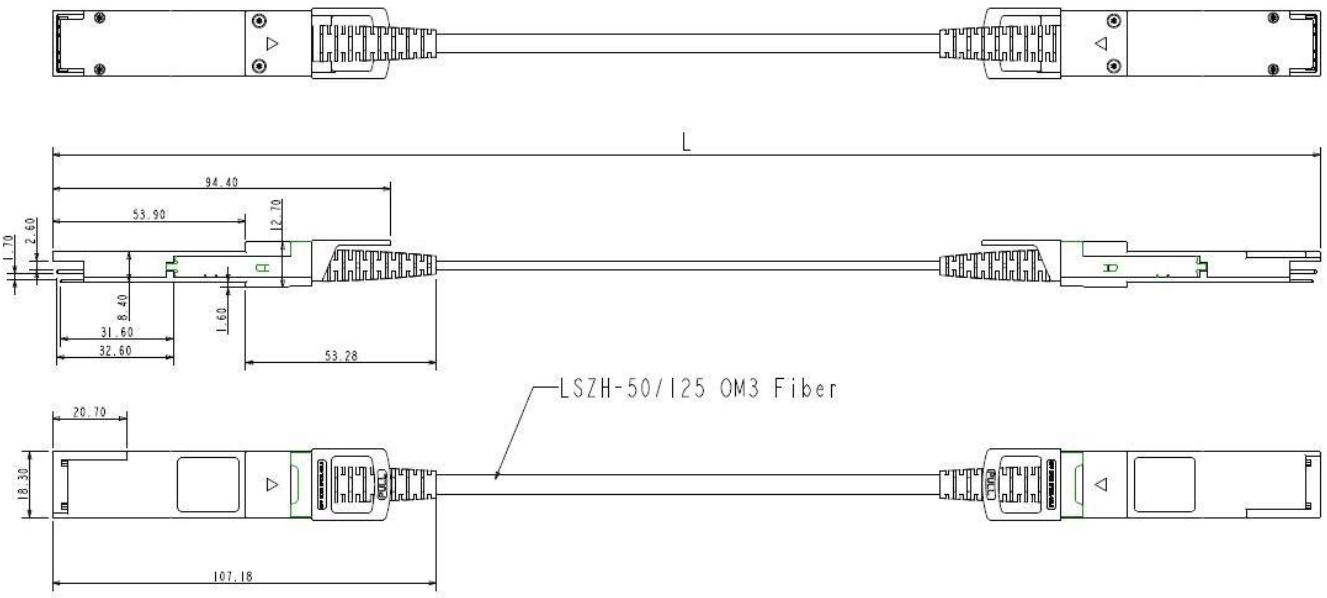

Рисунок 9. Mechanical Specifications

References

1. SFF-8436 QSFP+
2. Infiniband IB-4x-SX, IB-4x-DDR-SX, IB-4x-QDR-SX
3. Ethernet 40GBASE-SR4

Important Notice

Performance figures, data and any illustrative material provided in this data sheet are typical and must be specifically confirmed in writing by before they become applicable to any particular order or contract. In accordance with the policy of continuous improvement specifications may change without notice. The publication of information in this data sheet does not imply freedom from patent or other protective rights of or others. Further details are available from any sales representative.

Информация для заказа

Part Number	Описание продукта
NS-QSFP+40G-AOC-AXX(X)C	**XX(X)**=длина кабеля

XX(X)	
03	**03**=3m
05	**05**=5m
10	**10**=10m
20	**20**=20m
50	**50**=50m
100	**100**=100m

Проектирование сетей,
поставка оборудования, оптимизация и
поддержка IT-инфраструктуры

newnets.ru
newnets@newnets.ru
8 800 777 57 00