New Nets 80km XFP Optical Transceiver
NS-XFP-10G-ZR100D

Features



- XFP MSA Rev 4.5 Compliant
- Data rate from 9.95Gbps to 11.3Gbps
- Cooled EML with isolator
- APD receiver
- link length up to 80km (with amplifier)
- Low Power Dissipation 3.5W Maximum
- XFI and lineside loopback Mode Supported
- -5ºC to 70ºC Operating Case Temperature
- Diagnostic Performance Monitoring of module temperature,
  Supply Voltages, laser bias current,
  transmit optical power, and receive optical power
- RoHS compliant (lead free)

Applications

- SONET OC-192&SDH STM 64
- Ethernet (10GBASE and 10GBASE with FEC)
- Fiber Channel (10G and 10G with FEC)

Description

New Nets 100km XFP Transceiver is designed for 10G SDH/SONET and 10G Fiber Channel applications. The transmitter section incorporates a colded EML laser, and the receiver section consists of a APD photodiode integrated with a TIA, Integrated low power dual CDR with Electronic Dispersion Compensation (EDC). This module can be used to compensate channel impairments caused by either single mode fiber up to 100 km .All modules satisfy class I laser safety requirements. New Nets XFP transceiver provides an enhanced monitoring interface, which allows real-time access to device operating parameters such as transceiver temperature, laser bias current, transmitted optical power, received optical power and transceiver supply voltage.

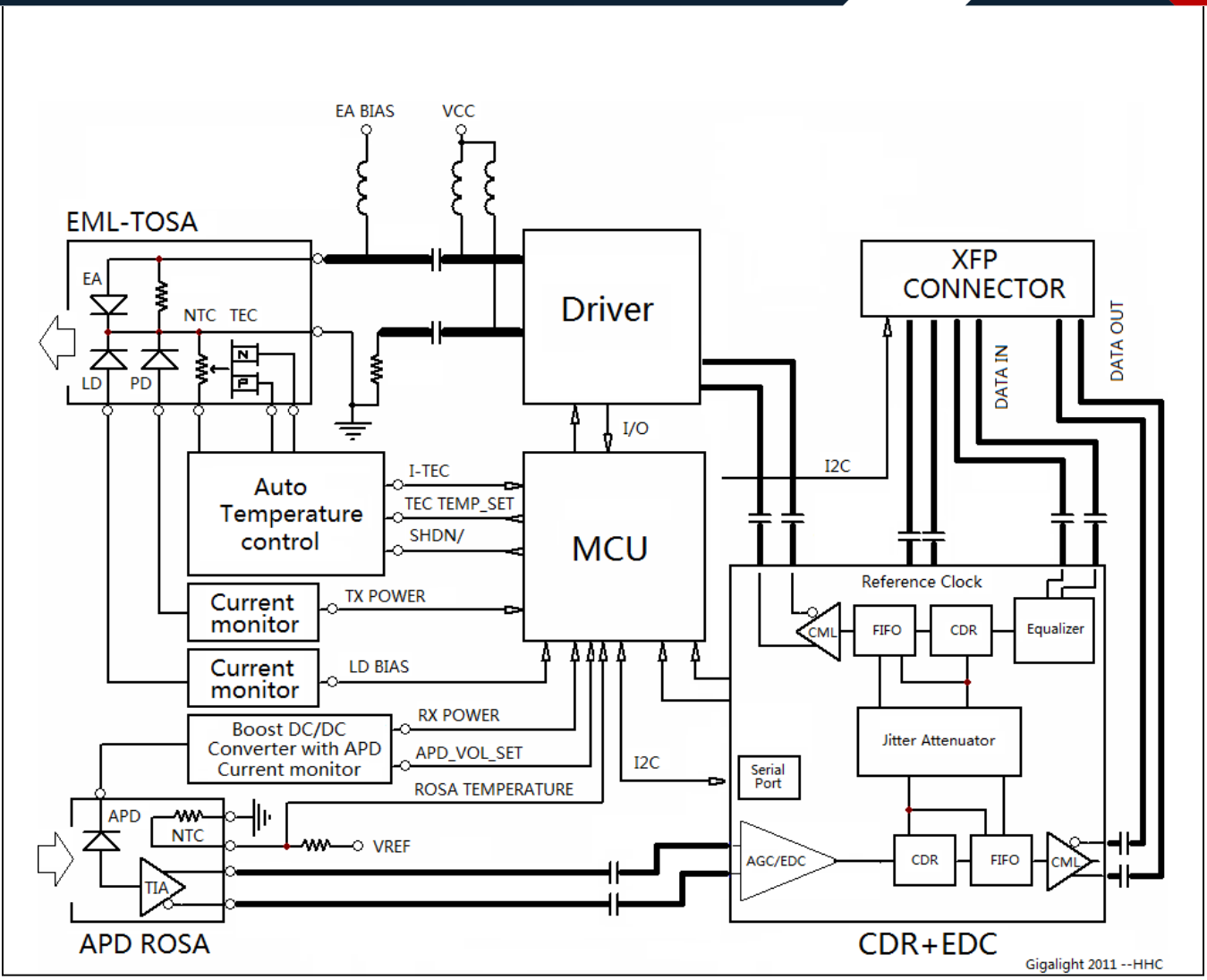

Figure1. Module Block Diagram

Absolute Maximum Ratings

Parameter	Symbol	Min	Max	Unit
Supply Voltage 1	Vcc3	-0.5	4.0	V
Supply Voltage 2	Vcc5	-0.5	6.0	V
Supply Voltage 3	Vcc2	-0.5	2	V
Storage Temperature	Tst	-40	85	ºC
Case Operating Temperature	Top	-5	70	ºC

Operating Conditions

Parameter	Symbol	Min	Typical	Max	Unit
Supply Voltage 1	Vcc3	3.13	3.3	3.47	V
Supply current 1	Icc3	-	-	750	mA
Supply Voltage 2	Vcc5	4.75	5	5.25	V
Supply current 2	Icc5	-	-	500	mA
Supply Voltage 3	Vcc2	1.71	1.8	1.89	V
Supply current 3	Icc2	-	-	750	mA
Operating Case temperature	Tca	-5	-	70	ºC
Module Power Dissipation	Pm	-	-	3.5	W

Transmitter Specifications – Optical

Parameter	Symbol	Min	Typical	Max	Unit
Data Rate Multirate	Mra	9.95	-	11.3	Gbps
Center Wavelength	λc	1530	-	1565	pm
Optical Transmit Power	Po	0	-	+4	dBm
Optical Transmit Power (disabled)	PTX_DIS	-	-	-30	dBm
Extinction Ratio	ER	9	-	-	dB
Jitter Generation(P-P)	JG P-P	-	-	0.1	UI
Jitter Generation(RMS)	JG RMS	-	-	0.01	UI
Spectral Width (-20dB)	Δλ20	-		0.3	nm
Side Mode Suppression Ratio	SMSR	30	-	-	dB
Dispersion penalty(2400ps/nm) [1]	DP1	-	-	2	dB
Dispersion penalty(2400ps/nm) [2]	DP2			4	dB
Relative Intensity Noise	RIN	-	-	-130	dB/Hz
Eye Mask	Compliant with ITU-T G.691 STM-64 eye mask				

Note:
1. BER=10^-12; PRBS 2^31-1@9.95Gbps
2. BER=10^-12; PRBS 2^31-1@11.3Gbps

Transmitter Specifications – Electrical

Parameter	Symbol	Min	Typical	Max	Unit
Input differential impedance	Rim	-	100	-	Ω
Differential data Input	VtxDIFF	120	-	850	mV
Transmit Disable Voltage	VD	2.0	-	Vcc3+0.3	V
Transmit Enable Voltage	Ven	0	-	+0.8	V
Transmit Disable Assert Time	Vn	-	-	10	us

Receiver Specifications – Optical

Parameter	Symbol	Min	Typical	Max	Unit
Data Rate Multirate	Mra	9.95	-	11.3	Gbps
Receiver Sensitivity 9.95Gb/s [1]	Rsens9	-	-	-24	dBm
Receiver Sensitivity 11.3Gb/s [1]	Rsens11	-	-	-23	dBm
Maximum Input Power	RX-overload	-7	-	-	dBm
Input Operating Wavelength	λ	1528	-	1565	nm
Reflectance	Rrx	-	-	-27	dB
Loss of Signal Asserted	LOS_A	-34	-	-	dBm
LOS De-Asserted	LOS_D	-	-	-24	dBm
LOS Hysteresis	LOS_H	0.5	-	-	dB

Note:
1. BER=10^-12; PRBS 2^31-1;

Receiver Specifications – Electrical

Parameter	Symbol	Min	Typical	Max	Unit
Output differential impedance	Rom	-	100	--	Ω
Differential Output Swing	Vout P-P	350	-	850	mV
Rise/Fall Time [1]	Tr / Tf	24	-	-	ps
Loss of Signal –Asserted	VOH	2	-	Vcc3+0.3-	V
Loss of Signal –Negated	VOL	GND	-	GND+0.5	V

Note:
1. 20%-80%;

Reference Clock

Parameter	Symbol	Min	Typical	Max	Unit
Clock Differential Input Impedance	CI	80	100	120	Ω
Differential Input Clock Amplitude (p-p)	DCA	640-	-	1600	mV
Reference Clock Duty Cycle	RCY	40	-	60	%
Reference Clock Rise/Fall Time [1]	Tr/Tf	200	-	1250	ps
Reference Clock Frequency	*fu*	-	Baud/64	-	MHz

Note:
1. 20%-80%;

Pin Descriptions

Pin	Logic	Symbol	Name/Description	Ref.
1		GND	Module Ground	1
2		VEE5	Optional –5.2 Power Supply – **Not required**	
3	LVTTL-I	Mod-Desel	Module De-select; When held low allows the module to , respond to 2-wire serial interface commands	
4	LVTTL-O	Interrupt	Interrupt (bar); Indicates presence of an important condition which can be read over the serial 2-wire interface	2
5	LVTTL-I	TX_DIS	Transmitter Disable; Transmitter laser source turned off	
6		VCC5	+5 Power Supply	
7		GND	Module Ground	1
8		VCC3	+3.3V Power Supply	
9		VCC3	+3.3V Power Supply	
10	LVTTL-I	SCL	Serial 2-wire interface clock	2
11	LVTTL- I/O	SDA	Serial 2-wire interface data line	2
12	LVTTL-O	Mod_Abs	Module Absent; Indicates module is not present. Grounded in the module.	2
13	LVTTL-O	Mod_NR	Module Not Ready;	2
14	LVTTL-O	RX_LOS	Receiver Loss of Signal indicator	2
15		GND	Module Ground	1
16		GND	Module Ground	1
17	CML-O	RD-	Receiver inverted data output	
18	CML-O	RD+	Receiver non-inverted data output	
19		GND	Module Ground	1
20		VCC2	+1.8V Power Supply	
21	LVTTL-I	P_Down/RST	Power Down; When high, places the module in the low power stand-by mode and on the falling edge of P_Down initiates a module reset Reset; The falling edge initiates a complete reset of the module including the 2-wire serial interface, equivalent to a power cycle.	
22		VCC2	+1.8V Power Supply	
23		GND	Module Ground	1
24	PECL-I	RefCLK+	Reference Clock non-inverted input, AC coupled on the host board	3
25	PECL-I	RefCLK-	Reference Clock inverted input, AC coupled on the host board	3
26		GND	Module Ground	1
27		GND	Module Ground	1
28	CML-I	TD-	Transmitter inverted data input	
29	CML-I	TD+	Transmitter non-inverted data input	
30		GND	Module Ground	1

Notes:
1. Module circuit ground is isolated from module chassis ground within the module.
2. Open collector; should be pulled up with 4.7k – 10k ohms on host board to a voltage between 3.15Vand 3.6V.
3. Reference Clock input is required.

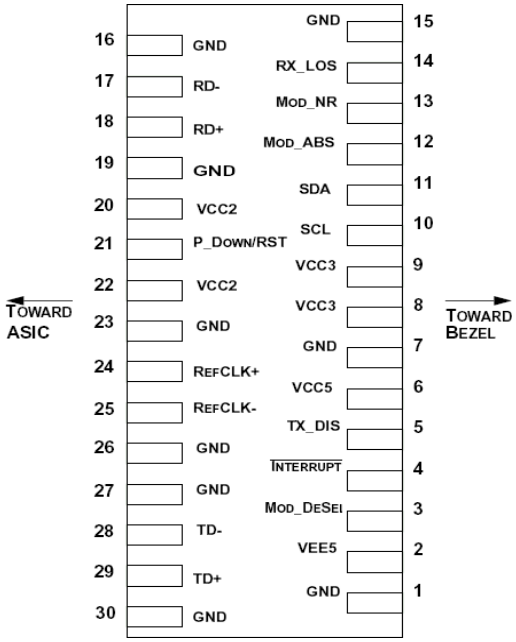

Figure2. Electrical Pin-out Details

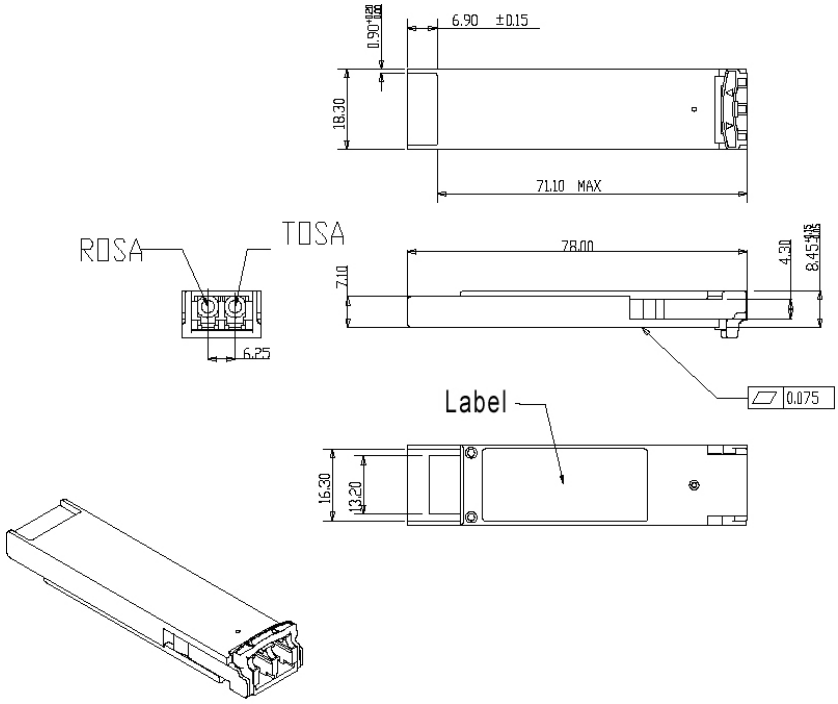

Figure3. Mechanical Specifications

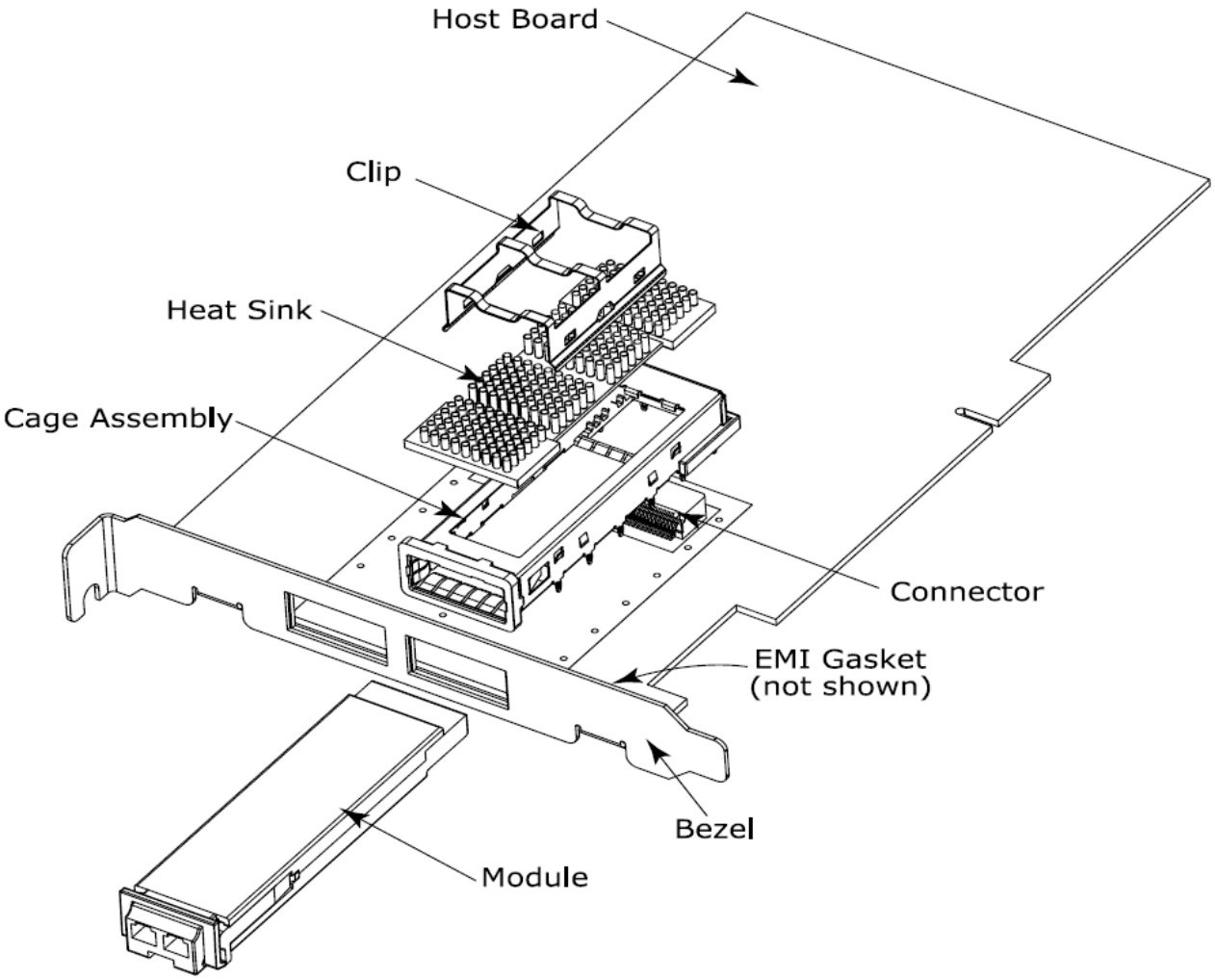

Figure4. XFP Mechanical Components

The mechanical components defined:

1. The module, clip and connector dimensions are constant for all applications. While the bezel, cage assembly, EMI gasket and heat sink can be designed and/or adjusted for the individual application.
2. The relatively small form factor of the XFP module combined with an adaptable heatsink option allows host system design optimization of module location, heatsink shape/dimension/fins design, and airflow control. The module can be inserted and removed from the cage with the heat sink and clip attached.

Regulatory Compliance

Feature	Agency	Standard	Certificate / Comments
Laser Safety	FDA	CDRH 21 CFR 1040 and Laser Notice No. 50	1120288-000
Product Safety	UL	UL and CUL EN60950-2:2007	E347511
Environmental protection	SGS	RoHS Directive 2002/95/EC	GZ1001008706/CHEM
EMC	WALTEK	EN 55022:2006+A1:2007 EN 55024:1998+A1+A2:2003 -	WT10093768-D-E-E

Ordering information

Part Number	Product Description
NS-XFP-10G-ZR100D	10Gbps, 1550nm XFP 100km, -5ºC ~ +70ºC

Important Notice

Performance figures, data and any illustrative material provided in this data sheet are typical and must be specifically confirmed in writing by New Nets before they become applicable to any particular order or contract. In accordance with the New Nets policy of continuous improvement specifications may change without notice.

The publication of information in this data sheet does not imply freedom from patent or other protective rights

of New Nets or others.