# NS-SFP-STM1-L20D

155Mbps SFP 1310nm 20km

## Особенности

- 155Mbps скорость передачи данных
- 1310нм FP лазер и PIN фотоприемник для передачи до 20км
- Согласован с SFP MSA и SFF-8472 с дуплексным LC коннектором
- DDM
- Согласован с RoHS
- Источник питания +3,3В
- Рабочие температуры
  Стандартные : -5 to +70°C
  Расширенные : -40 to +85°C




## Применение

SDH STM-1, S-1.1,L-1.1, L-1.2
SONET OC-3 IR1,LR1,LR2

## Описание

Высоко эффективные трансиверы со скоростью передачи данных 155Mbps
и дальностью связи до 20км с SMF.
Трансивер состоит из 3х секций: FP лазерный передатчик, PIN фотодиод интегрированный с TIA и MCU управляющая панель. Все модули удовлетворяют требованиям безопасности лазера класса I.
Трансиверы согласованы с SFP Multi-Source Agreement (MSA) и SFF-8472.

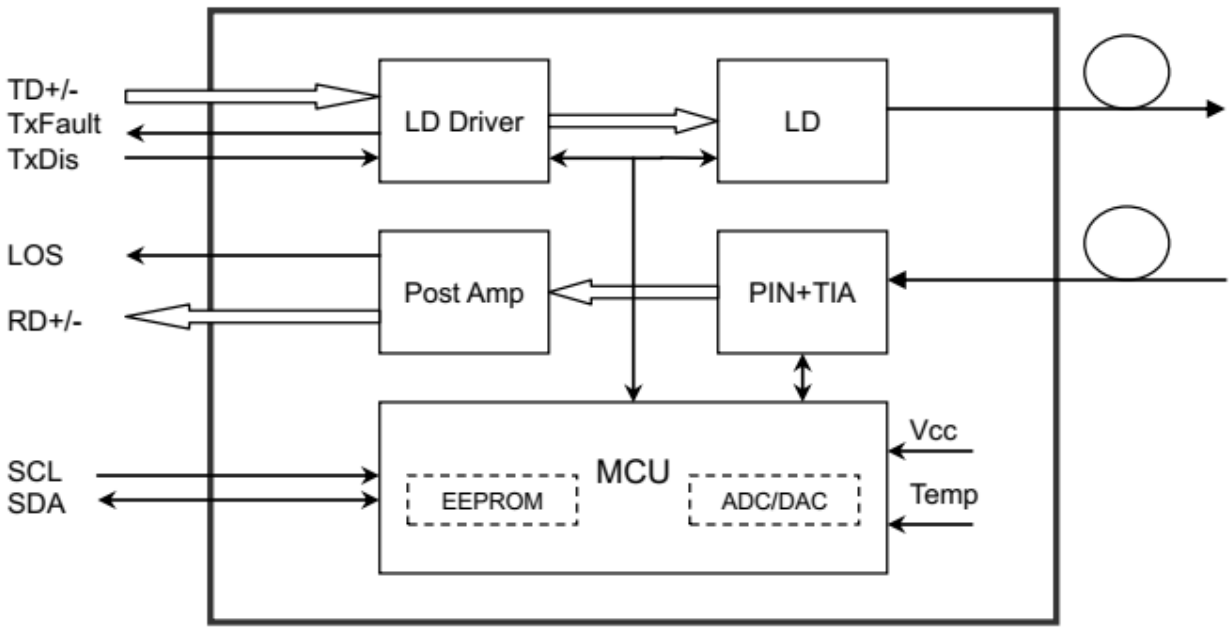

## Абсолютные максимальные показатели

**Таблица 1**

| Parameter | Symbol | Min | Max |
|---|---|---|---|
| Supply Voltage | Vcc | -0.5 | 4.5 |
| Storage Temperature | Ts | -40 | +85 |
| Operating Humidity | - | 5 | 85 |

## Рекомендуемые условия эксплуатации

**Таблица 2**

| Parameter | | Symbol | Min | Typical | Max | Unit |
|---|---|---|---|---|---|---|
| Operating Case Temperature | Standard | Tc | 0 | | +70 | °C |
| | Industrial | | -40 | | +85 | °C |
| Power Supply Voltage | | Vcc | 3.13 | 3.3 | 3.47 | V |
| Power Supply Current | | Icc | | | 300 | mA |
| Data Rate | | | | 155 | | Mbp |

## Оптические и электрические характеристики

### NS-SFP-STM1-L20D: (FP and PIN, 1310nm, 20km Reach)

**Таблица 3**

| Parameter | | Symbol | Min | Typical | Max | Unit | Notes |
|---|---|---|---|---|---|---|---|
| **Transmitter** | | | | | | | |
| Centre Wavelength | | λc | 1260 | 1310 | 1360 | nm | - |
| Spectral Width (RMS) | | Δλ | - | - | 4 | nm | - |
| Average Output Power | | Pout | -14 | - | -8 | dBm | 1 |
| Extinction Ratio | | ER | 9 | - | - | dB | - |
| Data Input Swing Differential | | VIN | 400 | - | 1800 | mV | 2 |
| Input Differential Impedance | | ZIN | 90 | 100 | 110 | Ω | - |
| TX Disable | Disable | | 2.0 | - | Vcc | V | - |
| | Enable | | 0 | - | 0.8 | V | - |
| TX Fault | Fault | | 2.0 | - | Vcc | V | - |
| | Normal | | 0 | - | 0.8 | V | - |
| **Receiver** | | | | | | | |
| Centre Wavelength | | λc | 1260 | - | 1580 | nm | - |
| Receiver Sensitivity | | -32 | - | - | -32 | dBm | 3 |
| Receiver Overload | | -3 | -3 | - | - | dBm | 3 |
| LOS De-Assert | | LOSD | - | - | -34 | dBm | - |
| LOS Assert | | LOSA | -45 | - | - | dBm | - |
| LOS Hysteresis | | 1 | 1 | - | 4 | dB | - |
| Data Output Swing Differential | | Vout | 370 | - | 1800 | mV | 4 |
| LOS | High | | 2.0 | - | Vcc | V | - |
| | Low | | 0.8 | - | 0.8 | V | - |

**Notes:**

1. The optical power is launched into SMF.
2. PECL input, internally AC-coupled and terminated.
3. Measured with a PRBS $2_{23}$-1 test pattern @155Mbps, BER ≤$1\times10^{-10}$
4. Internally AC-coup

## Временные характеристики

**Таблица 4**

| Parameter | Symbol | Min | Typical | Max | Unit |
|---|---|---|---|---|---|
| Tx Disable Negate Time | t_on | - | - | 1 | ms |
| Tx Disable Assert Time | t_off | - | - | 10 | μs |
| Time To Initialize, including Reset of Tx Fault | t_init | - | - | 300 | ms |
| Tx Fault Assert Time | t_fault | - | - | 100 | μs |
| Tx Disable To Reset | t_reset | 10 | - | - | μs |
| LOS Assert Time | t_loss_on | - | - | 100 | μs |
| LOS De-assert Time | t_loss_off | - | - | 100 | μs |
| Serial ID Clock Rate | f_serial_clock | - | - | 400 | KHz |
| MOD_DEF (0:2)-High | $V_H$ | 2 | - | Vcc | V |
| MOD_DEF (0:2)-Low | $V_L$ | - | - | 0.8 | V |

## Диагностика(DDMI)

**Таблица 5**

| Parameter | Range | Unit | Accuracy | Calibration |
|---|---|---|---|---|
| Temperature | 0 to +70<br>-40 to+85 | °C | ±3°C | Internal / External |
| Voltage | 3.0 to 3.6 | V | ±3% | Internal / External |
| Bias Current | 0 to 100 | mA | ±10% | Internal / External |
| TX Power | -14 to -8 | dBm | ±3dB | Internal / External |
| RX Power | -28 to -3 | dBm | ±3dB | Internal / External |

## Digital Diagnostic Memory Map

The transceivers provide serial ID memory contents and diagnostic information about the present operating conditions by the 2-wire serial interface (SCL, SDA).
The diagnostic information with internal calibration or external calibration all are implemented, including received power monitoring, transmitted power monitoring, bias current monitoring, supply voltage monitoring and temperature monitoring.
The digital diagnostic memory map specific data field defines as following.

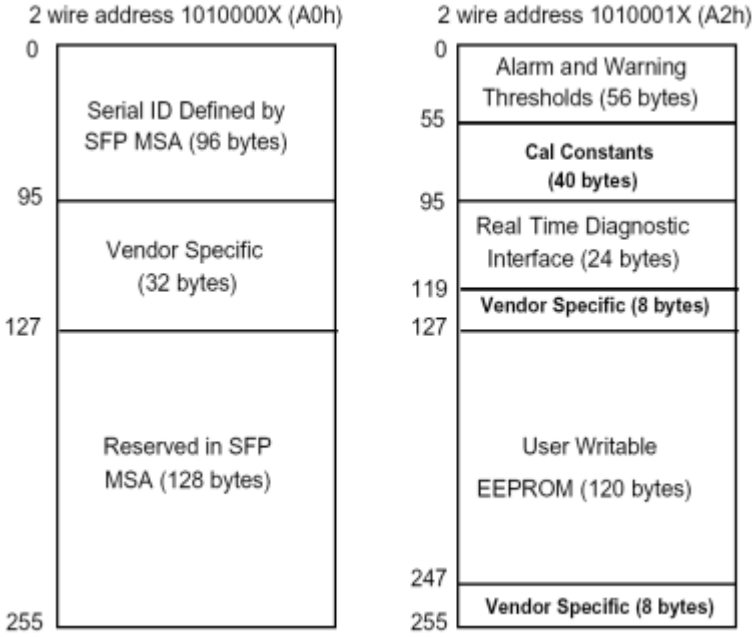

## Pin Definitions

Pin Diagram

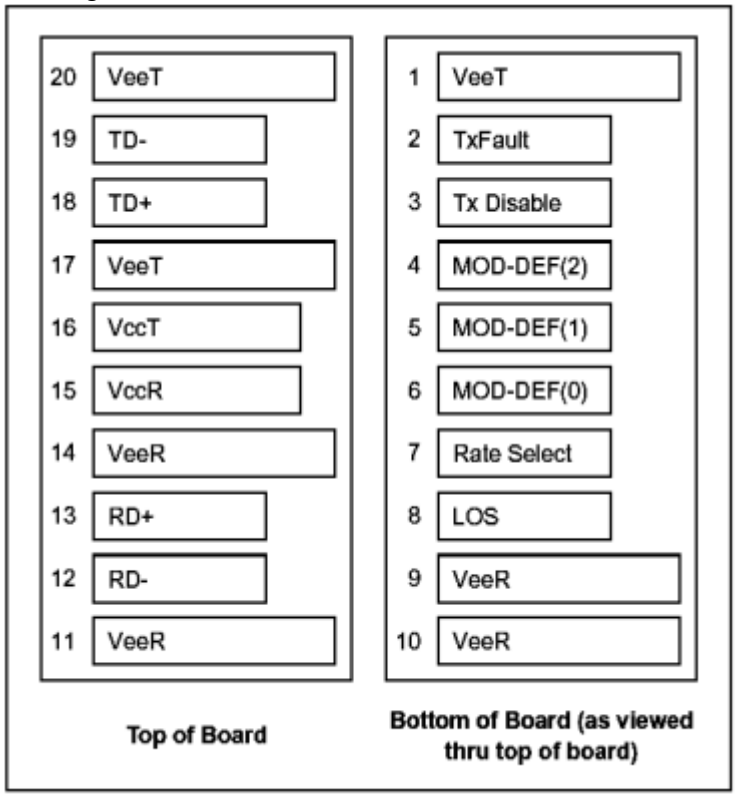

## Pin Описание

| Pin | Signal Name | Description | Plug Seq. | Notes |
|---|---|---|---|---|
| 1 | VEET | Transmitter Ground | 1 | |
| 2 | TX FAULT | Transmitter Fault Indication | 3 | Note 1 |
| 3 | TX DISABLE | Transmitter Disable | 3 | Note 2 |
| 4 | MOD_DEF(2) | SDA Serial Data Signal | 3 | Note 3 |
| 5 | MOD_DEF(1) | SCL Serial Clock Signal | 3 | Note 3 |
| 6 | MOD_DEF(0) | TTL Low | 3 | Note 3 |
| 7 | Rate Select | Not Connected | 3 | |
| 8 | LOS | Loss of Signal | 3 | Note 4 |
| 9 | VEER | Receiver ground | 1 | |
| 10 | VEER | Receiver ground | 1 | |
| 11 | VEER | Receiver ground | 1 | |
| 12 | RD- | Inv. Received Data Out | 3 | Note 5 |
| 13 | RD+ | Received Data Out | 3 | Note 5 |
| 14 | VEER | Receiver ground | 1 | |
| 15 | VCCR | Receiver Power Supply | 2 | |
| 16 | VCCT | Transmitter Power Supply | 2 | |
| 17 | VEET | Transmitter Ground | 1 | |
| 18 | TD+ | Transmit Data In | 3 | Note 6 |
| 19 | TD- | Inv. Transmit Data In | 3 | Note 6 |
| 20 | VEET | Transmitter Ground | 1 | |

**Notes:**

Plug Seq.: Pin engagement sequence during hot plugging.

1) TX Fault is an open collector output, which should be pulled up with a 4.7k~10kΩ resistor on the host board to a voltage between 2.0V and Vcc+0.3V. Logic 0 indicates normal operation; Logic 1 indicates a laser fault of some kind. In the low state, the output will be pulled to less than 0.8V.

2) TX Disable is an input that is used to shut down the transmitter optical output. It is pulled up within the module with a 4.7k~10kΩ resistor. Its states are:

| | |
|---|---|
| Low (0 to 0.8V): | Transmitter on |
| (>0.8V, < 2.0V): | Undefined |
| High (2.0 to 3.465V): | Transmitter Disabled |
| Open: | Transmitter Disabled |

3) Mod-Def 0,1,2. These are the module definition pins. They should be pulled up with a 4.7k~10kΩ resistor on the host board. The pull-up voltage shall be VccT or VccR.

Mod-Def 0 is grounded by the module to indicate that the module is present

Mod-Def 1 is the clock line of two wire serial interface for serial ID

Mod-Def 2 is the data line of two wire serial interface for serial ID

4) LOS is an open collector output, which should be pulled up with a 4.7k~10kΩ resistor. Pull up voltage between 2.0V and Vcc+0.3V. Logic 1 indicates loss of signal; Logic 0 indicates normal operation. In the low state, the output will be pulled to less than 0.8V.

5) RD-/+: These are the differential receiver outputs. They are internally AC-coupled 100 differential lines which should be terminated with 100Ω (differential) at the user SERDES.

6) TD-/+: These are the differential transmitter inputs. They are internally AC-coupled, differential lines with 100Ω differential termination inside the module.

## Recommended Interface Circuit

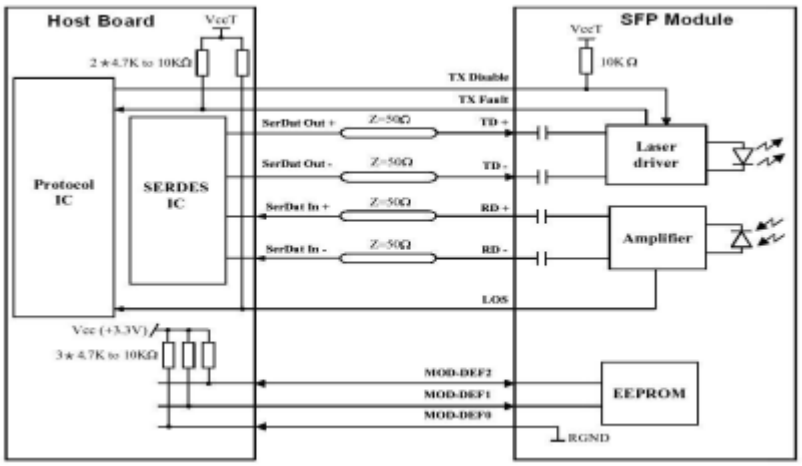


## Механические габариты

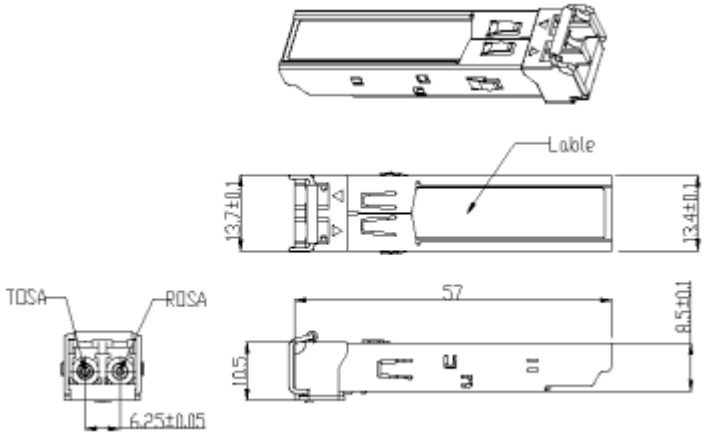


## Информация для заказа

| Part Number | Product Description |
|---|---|
| NS-SFP-STM1-L20 | 1310nm, 155Mbps, 20km, 0ºC ~ +70ºC |
| NS-SFP-STM1-L20D | 1310nm, 155Mbps, 20km, 0ºC ~ +70ºC, With Digital Diagnostic Monitoring |
| NS-SFP-STM1-L20I | 1310nm, 155Mbps, 20km, -40ºC ~ +85ºC |
| NS-SFP-STM1-L20DI | 1310nm, 155Mbps, 20km, -40ºC ~ +85ºC, With Digital Diagnostic Monitoring |